TF1589

Models V35B and V35RB

Digital Voltmeter

Instruction Manual

non-linear systems, inc.

non linear systems, inc.

DEL MAR, CALIFORNIA

Models V35B and V35RB

Digital Voltmeter

Instruction Manual

TF1589

Part 2

Notes:

1. The V35B Digital Voltmeter Instruction Manual is in two parts. Part 1, supplied in the front cover envelope of Part 2, contains text relating to the figures, tables, schematics and parts list data of Part 2.
2. The *Appendix* contains additional V35RB information.

This manual is for instrument Serial No._____

Non-Linear Systems, Inc.
Del Mar, California

V35B; 1st Printing; 500; Sept. 1962

V35B/V35RB; Revised, 500; Jan. 1963

V35B/V35RB; 500; June 1963

Entire contents copyright, 1963. No part of this book may be reproduced without written permission from Non-Linear Systems, Inc., Del Mar, Calif.

TABLE OF CONTENTS

Figure Number		Page
1	Power Plug Pin Coding.	4
2	V35B Cables. Top: Signal Input. Bottom: External Reference Supply.	4
3	External Reference Supply Connection . . . To Measure Positive and Negative Input Voltages.	5
4	External Reference Supply Connection . . . To Measure Input Voltages of a Single Circuit.	5
5	Ratiometer Linearity Test Circuit.	5
6	Front Panel Controls.	6
7	Calibration Adjustment Points and Plug-in Component Identification.	7
8	Block Diagram of V35B.	7
9	Stepping Switch, Kelvin-Varley Divider, and Relay Portion of the Programmer.	8
10	Tabular Presentation of V35B Logic.	9
11	Chart: End of Scan, Print Timing, and Logic.	10
12	AND-OR Gates.	11
13	AC Coupled AND Gate.	11
14	Flip-flop Trigger Circuits.	12
15	Flip-flop Only.	13
16	Flip-flop with Trigger.	13
17	Chart: Timing.	14
18	Digital Voltmeter, Bottom View.	15
19	Dummy Amplifier used to Simulate Error Amplifier.	16
20	Dummy Amplifier Test Procedure.	17
21	Troubleshooting with Dummy Amplifier.	18
22	Simplified Schematic & Logic Diagram: Timing Circuits.	20
23	Simplified Schematic & Logic Diagram: Programmer.	22
24	Simplified Schematic & Logic Diagram: Programmer Commands.	23
25	Error Amplifier Output Wave Form.	24
26	Jumper Connection for 10-Volt Calibrate Resistors.	25
27	Simplified Schematic: Range & Function Control.	26
28	Front View of Readout (without visor) Showing Lamps Correctly Installed.	27
29	A Board, Parts List, and Schematic.	28
30	B Board, Parts List, and Schematic.	30
31	C Board, Parts List, and Schematic.	32
32	C Board Block Diagram.	33
33	D Board (Instrument uses Two D Boards).	34
34	Amplifier, Front View, and Schematic.	36
35	Amplifier, Rear View (partially disassembled).	36
36	Amplifier Block Diagram and Voltage Source for Test. Parts List.	38
37	Programmer Assembly, Open View — Front (see Figures 39, 40, and 41 for parts identification).	40
38	Programmer Assembly, Open View — Rear.	41
39	Programmer, Relay Board (harness removed). See Page 45 for Schematic.	42
40	Programmer, Matrix Board (harness removed). See Page 45 for Schematic.	43
41	Programmer, Counter Board (harness removed). See Page 45 for Schematic.	44
42	Zener Reference Voltage Supply Board.	46
43	Trigger Control Board.	48
44	Two-relay and Four-relay Boards.	50
45	Input Filter.	52
46	Front Panel Facade seen from Inside.	54

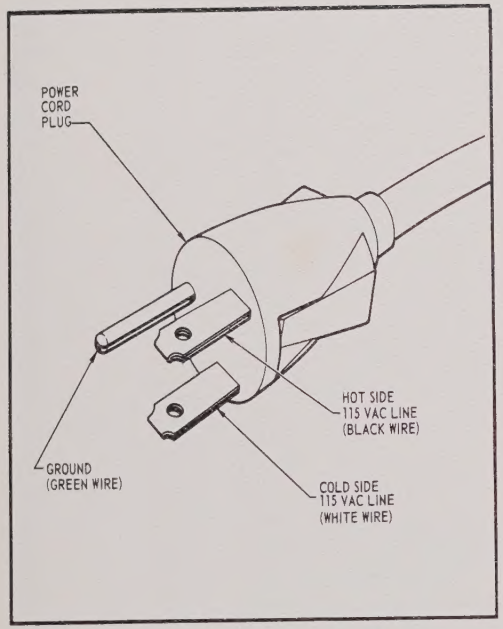

Figure 1. Power Plug Pin Coding.

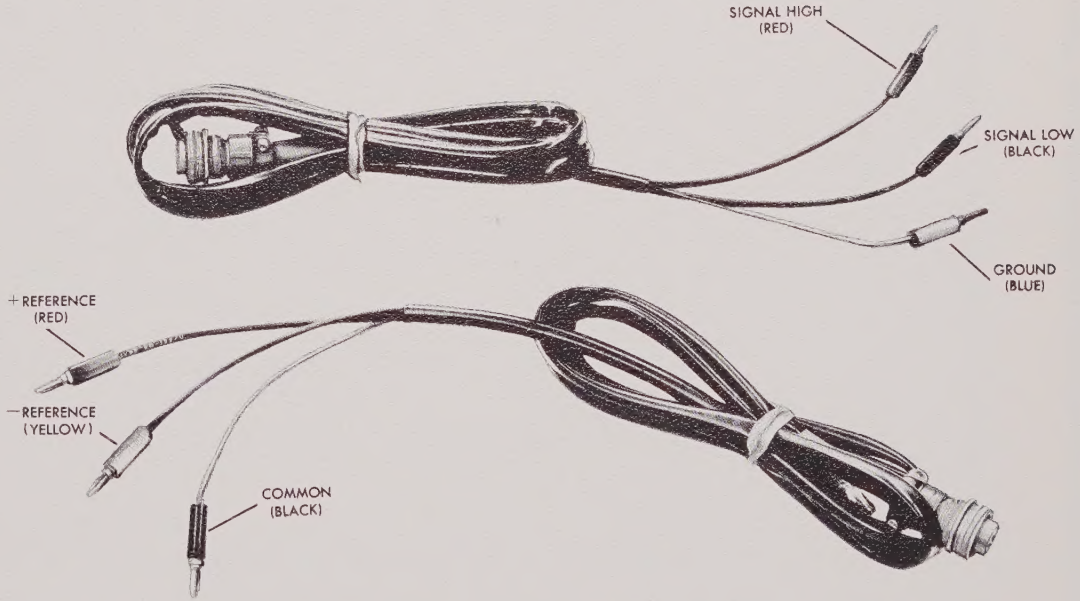

Figure 2. V35B Cables. Top: Signal Input. Bottom: External Reference Supply.

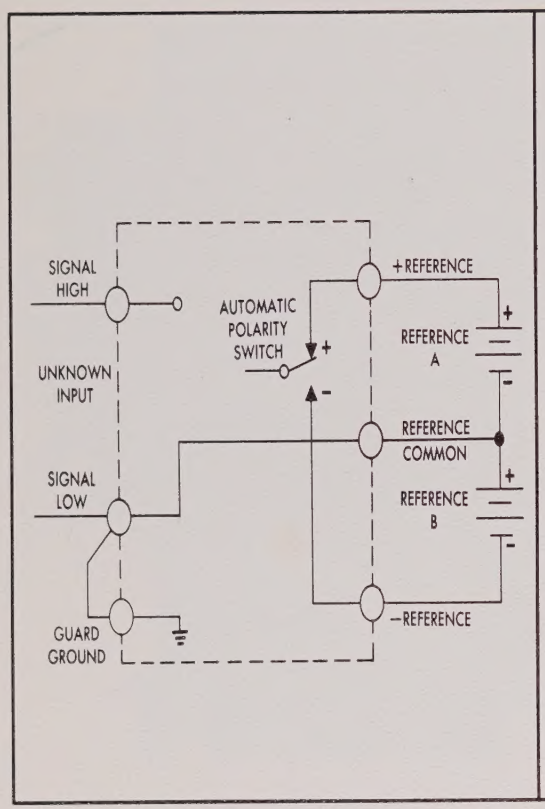

Figure 3. External Reference Supply Connection . . . To Measure Positive and Negative Input Voltages.

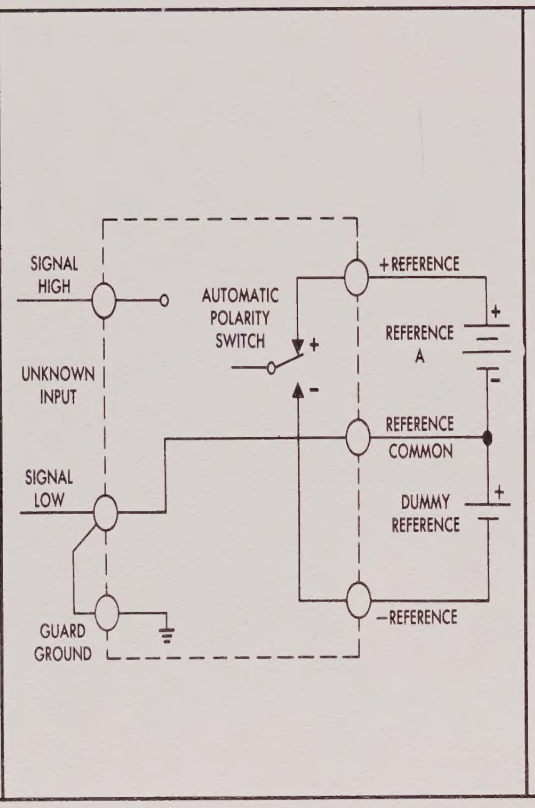

Figure 4. External Reference Supply Connection . . . To Measure Input Voltages of a Single Circuit.

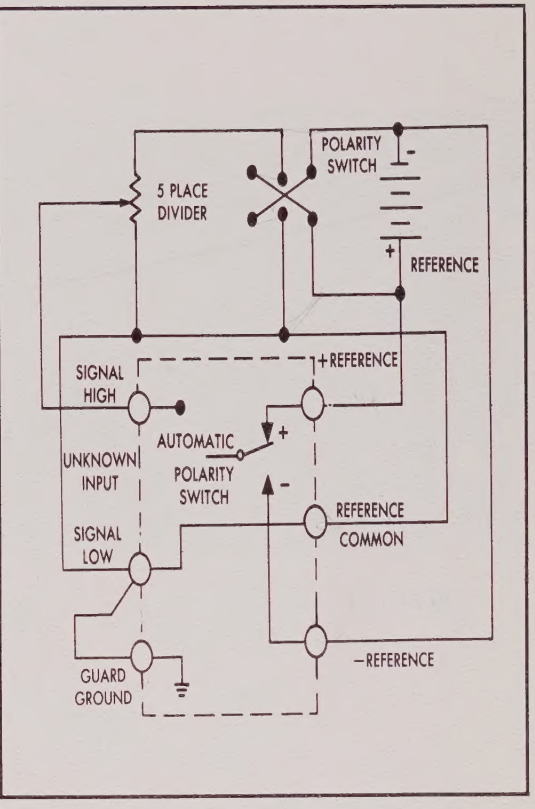

Figure 5. Ratiometer Linearity Test Circuit.

Figure 6. Front Panel Controls.

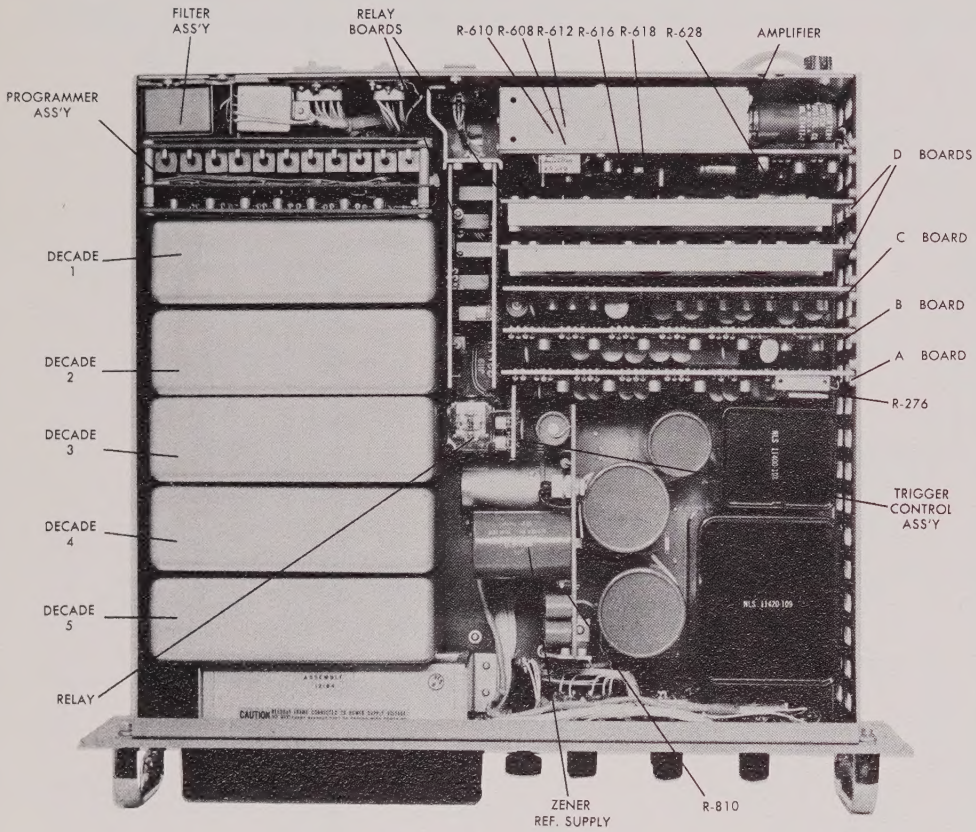

Figure 7. Calibration Adjustment Points and Plug-in Component Identification.

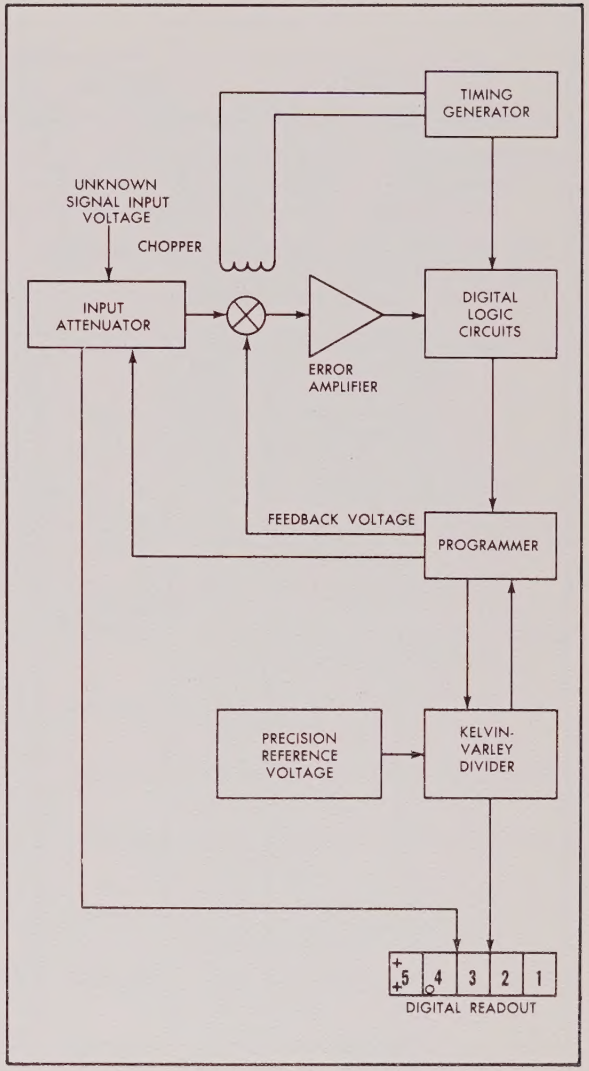

Figure 8. Block Diagram of V35B.

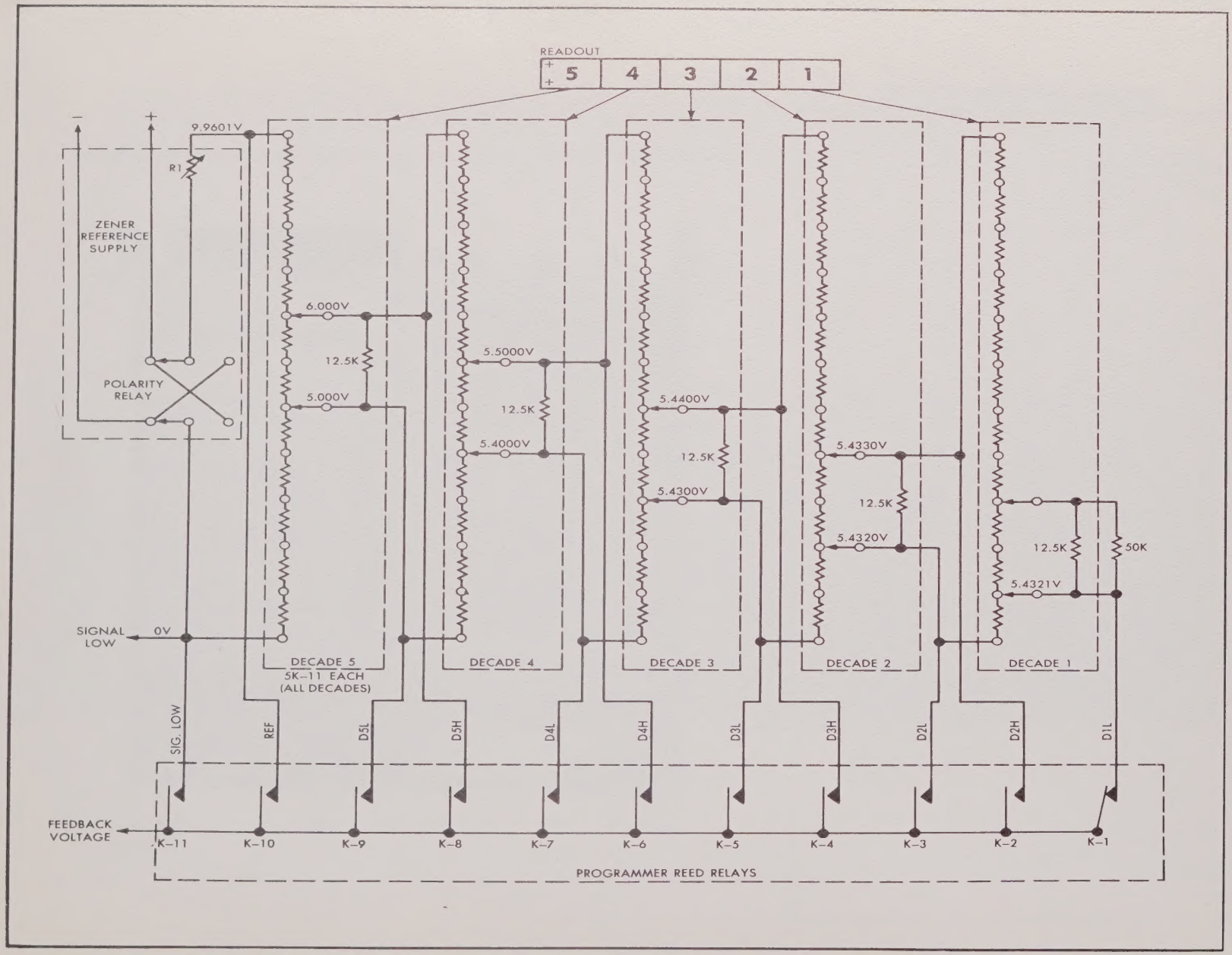

Figure 9. Stepping Switch, Kelvin-Varley Divider, and Relay Portion of the Programmer.

COUNTER POSITION	FEEDBACK	LOW-HIGH FLIP-FLOP	ERROR	FORWARD FLIP-FLOP	BACKWARD FLIP-FLOP	READOUT SIGNALS ZEROS	READOUT SIGNALS NINES	OUTPUT	NOTES
6	Ref. Low	LH	(—)	—	—	—	—	△P	Upon receipt of △P, the polarity is reversed & (—) becomes (+) + (0).
*6	Ref. Low	LH	(+) + (0)	F	$\overline{B}$	$\overline{D_5 0}$	—	Decade 5	Inhibits the turn-around signal to the "F" Flip-Flop and steps Decade 5 to Zero.
6	Ref. High	$\overline{LH}$	(+) + (0)	—	—	—	—	△Q	One △Q per bit is provided until (—) error is obtained.
*5	Dec. 5 Low	LH	(+) + (0)	F	$\overline{B}$	$\overline{D_4 0}$	—	Decade 4	Steps Decade 4 to Zero.
5	Dec. 5 Low	LH	(—)	—	B	$\overline{D_5 0}$	—	Decade 5	Steps Decade 5 until (+) + (0) error is obtained (to Zero).
5	Dec. 5 High	$\overline{LH}$	(+) + (0)	—	B	—	$\overline{D_5 9}$	Decade 5	Steps Decade 5 until (—) error is obtained.
*4	Dec. 4 Low	LH	(+) + (0)	F	$\overline{B}$	$\overline{D_3 0}$	—	Decade 3	Steps Decade 3 to Zero.
4	Dec. 4 Low	LH	(—)	—	B	$\overline{D_4 0}$	—	Decade 4	Steps Decade 4 until (+) + (0) error is obtained (to Zero).
4	Dec. 4 High	$\overline{LH}$	(+) + (0)	—	B	—	$\overline{D_4 9}$	Decade 4	Steps Decade 4 until (—) error is obtained.
3	Dec. 3 Low	LH	(—)	—	B	$\overline{D_3 0}$	—	Decade 3	Steps Decade 3 until (+) + (0) error is obtained (to Zero).
3	Dec. 3 High	LH	(+) + (0)	—	B	—	$\overline{D_3 9}$	Decade 3	Steps Decade 3 until (—) error is obtained.
2	Dec. 2 Low	LH	(—)	—	B	$\overline{D_2 0}$	—	Decade 2	Steps Decade 2 until (+) + (0) error is obtained (to Zero).
2	Dec. 2 High	$\overline{LH}$	(+) + (0)	—	B	—	$\overline{D_2 9}$	Decade 2	Steps Decade 2 until (—) error is obtained.
1	Dec. 1 Low	LH	(—)	—	B	$\overline{D_1 0}$	—	Decade 1	Steps Decade 1 until (+) error is obtained (to Zero).
1	Dec. 1 Low	$\overline{LH}$	(+)	—	B	—	$\overline{D_1 9}$	Decade 1	Steps Decade 1 until error is not (+).

Figure 10. Tabular Presentation of V35B Logic.

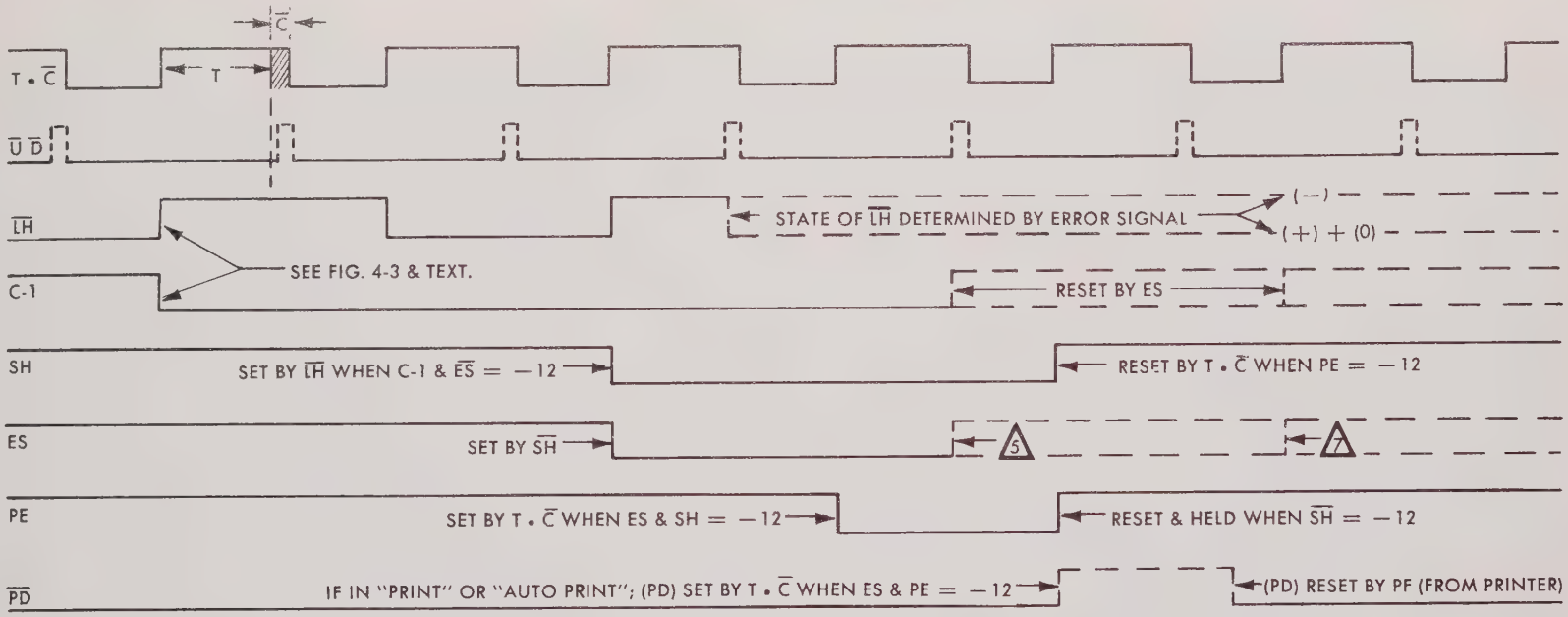

NOTES:

1. "SET" OR RESET OCCURS WHEN INDICATED TERM GOES FROM −12 TO 0 VOLTS, EXCEPT AS NOTED.
2. PD IS HELD IN THE RESET CONDITION WHEN NOT IN "PRINT" OR "AUTO PRINT".
3. ES IS HELD IN THE SET CONDITION WHEN PD = −12 (SET).
4. SOLID LINES INDICATE THAT EVENT ALWAYS OCCUR AT THE TIMES AND IN THE STATE SHOWN; — DASHED LINES INDICATE THAT TIMES AND/OR STATES ARE DEPENDENT ON SPECIFIED CONDITIONS.

5. IF IN "AUTO PRINT", ES WILL BE RESET BY Ū D̄ WHEN PE = −12, (IF Ū D̄ EXISTS).

6. IF ES RESET, PD CANNOT BE SET AND THE PRINT SIGNAL IS INHIBITED.

7. IF ES IS NOT RESET AT 5 IT WILL REMAIN SET UNTIL MS (TRIGGER CONTROL FF) IS SET (−12) AND THE FIRST T • C̄ (SEE NOTE 1) RESETS ES. THE MS FF IS NOT SHOWN ON THIS CHART SINCE THERE IS NO SPECIFIC TIMING RELATIONSHIP.

Figure 11. Chart: End of Scan, Print Timing, and Logic.

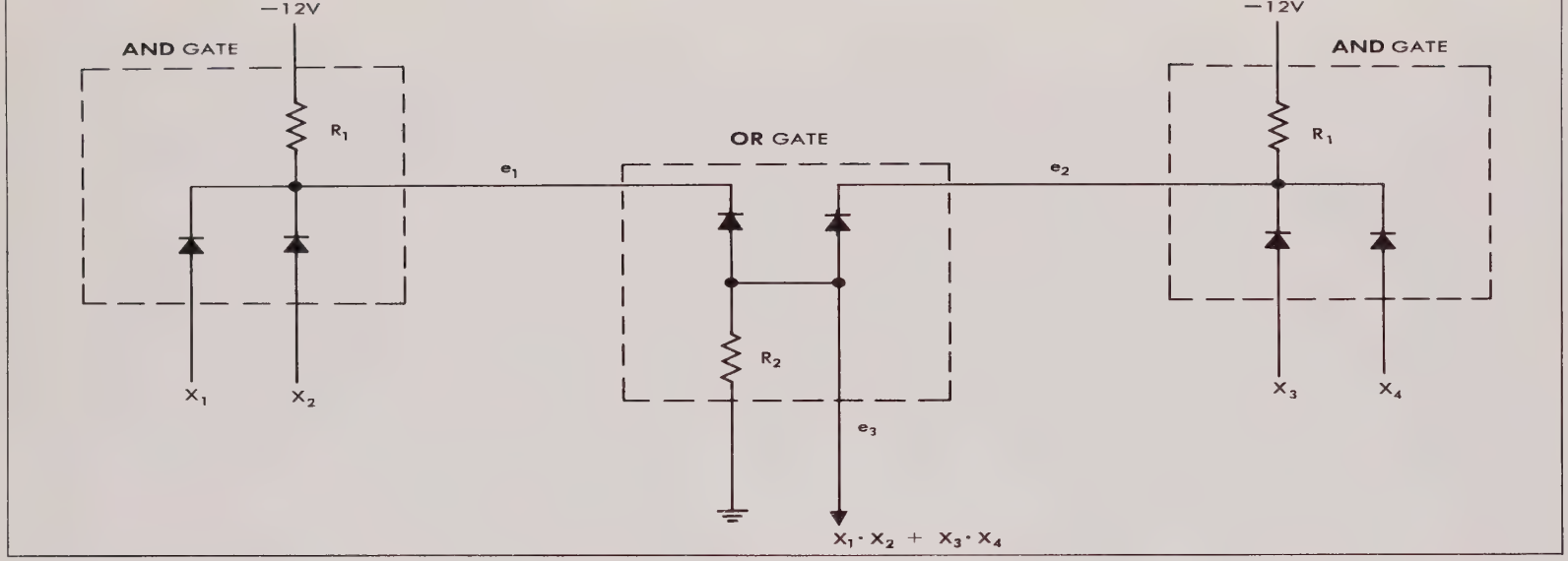

Figure 12. AND-OR Gates.

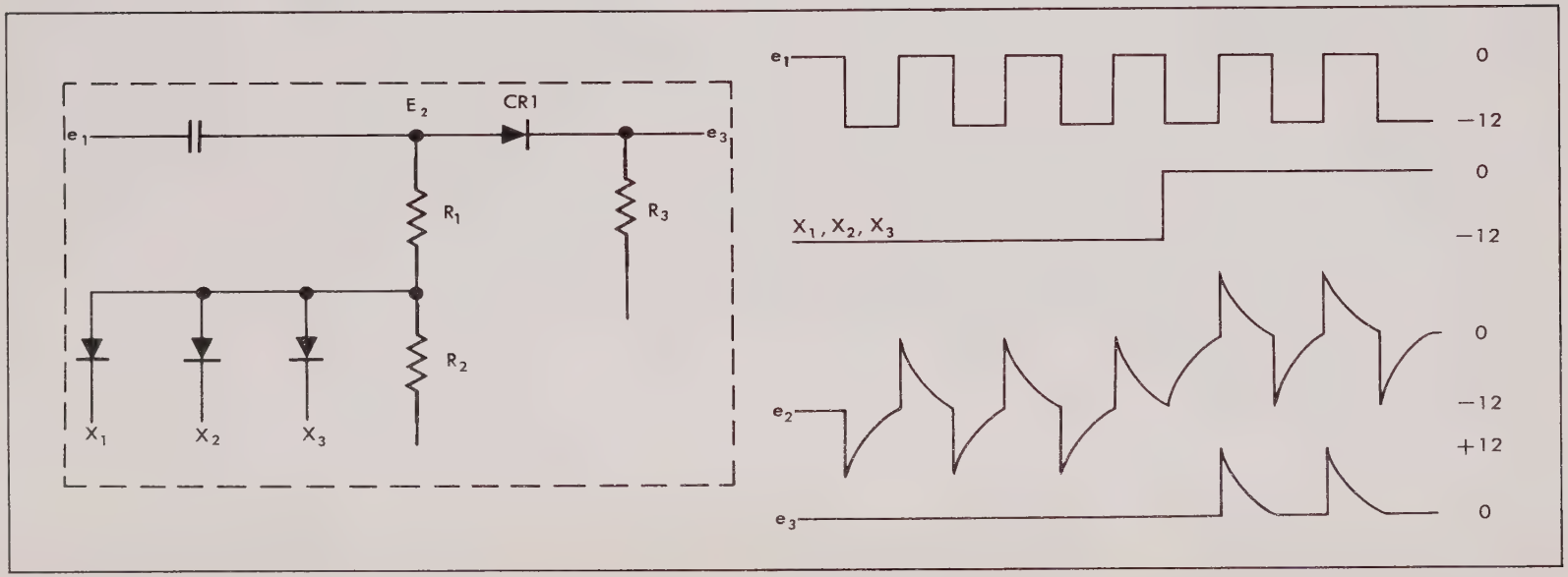

Figure 13. AC Coupled AND Gate.

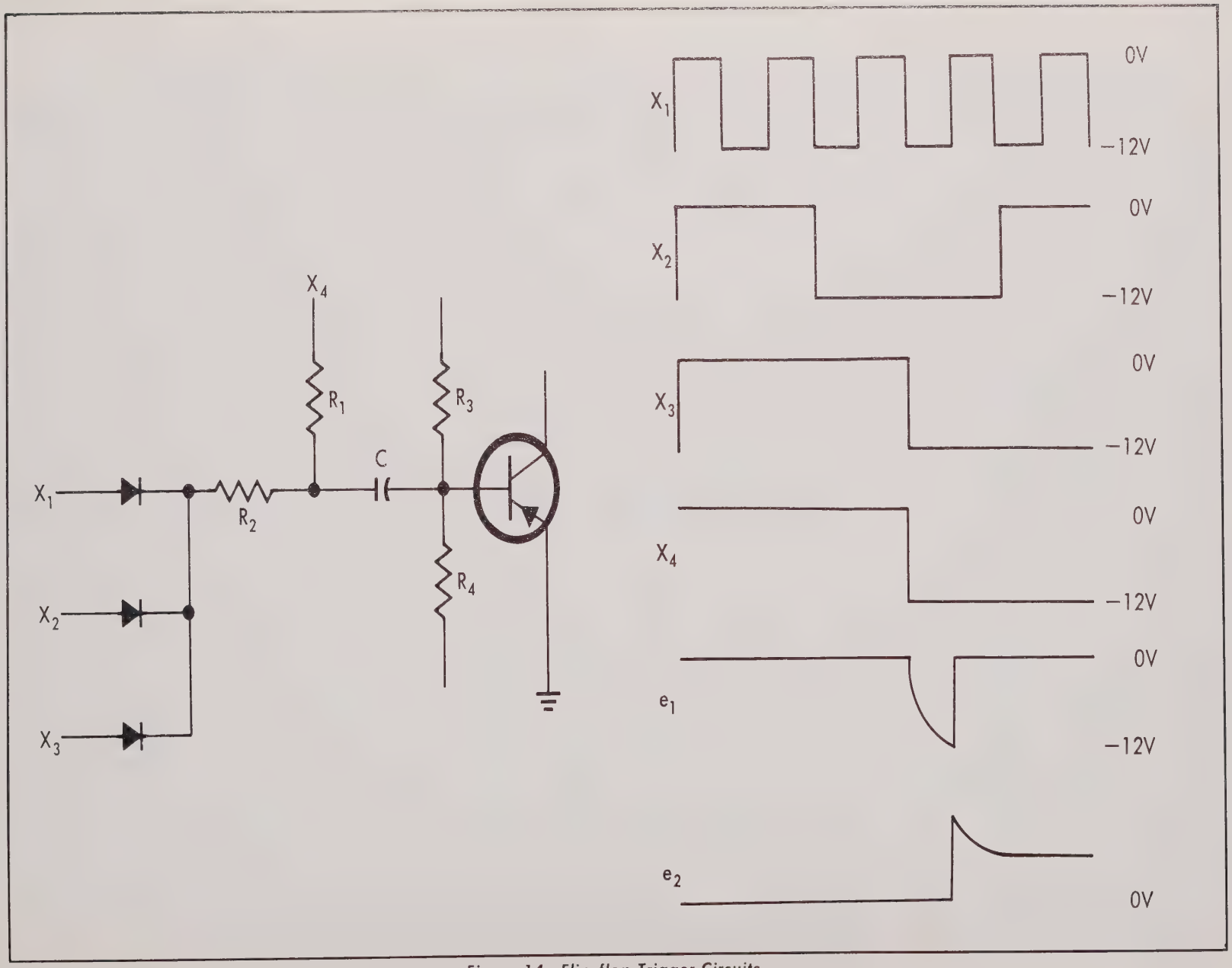

Figure 14. Flip-flop Trigger Circuits.

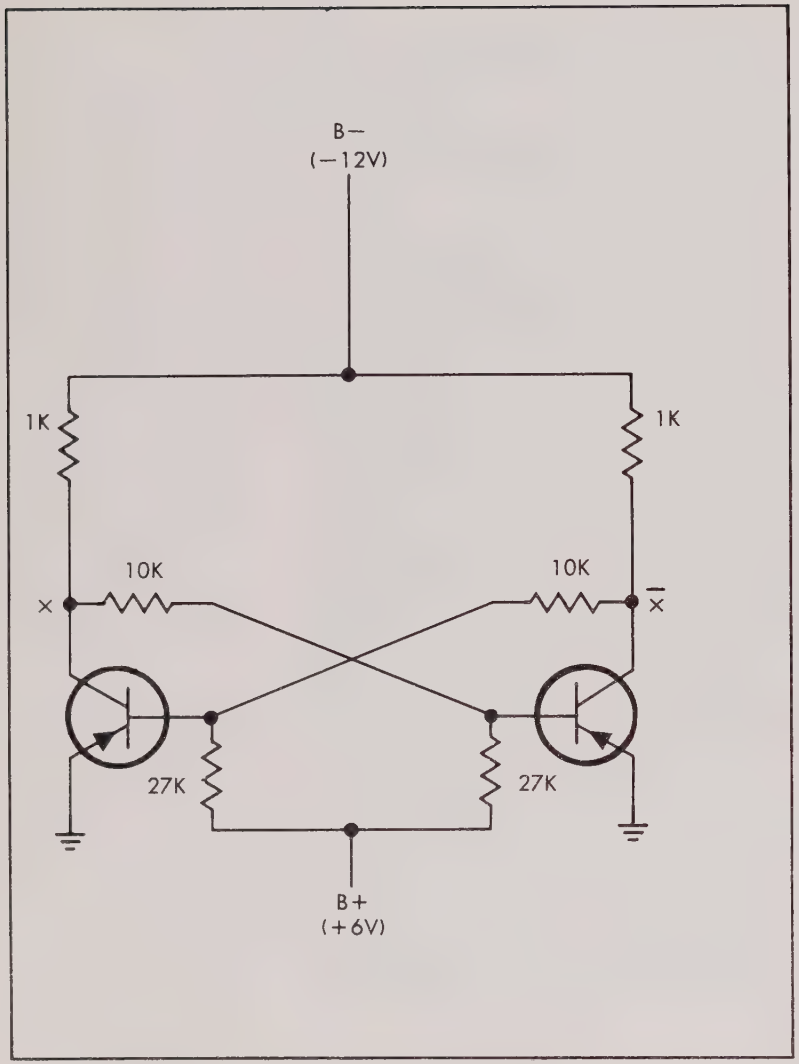

Figure 15. Flip-flop Only.

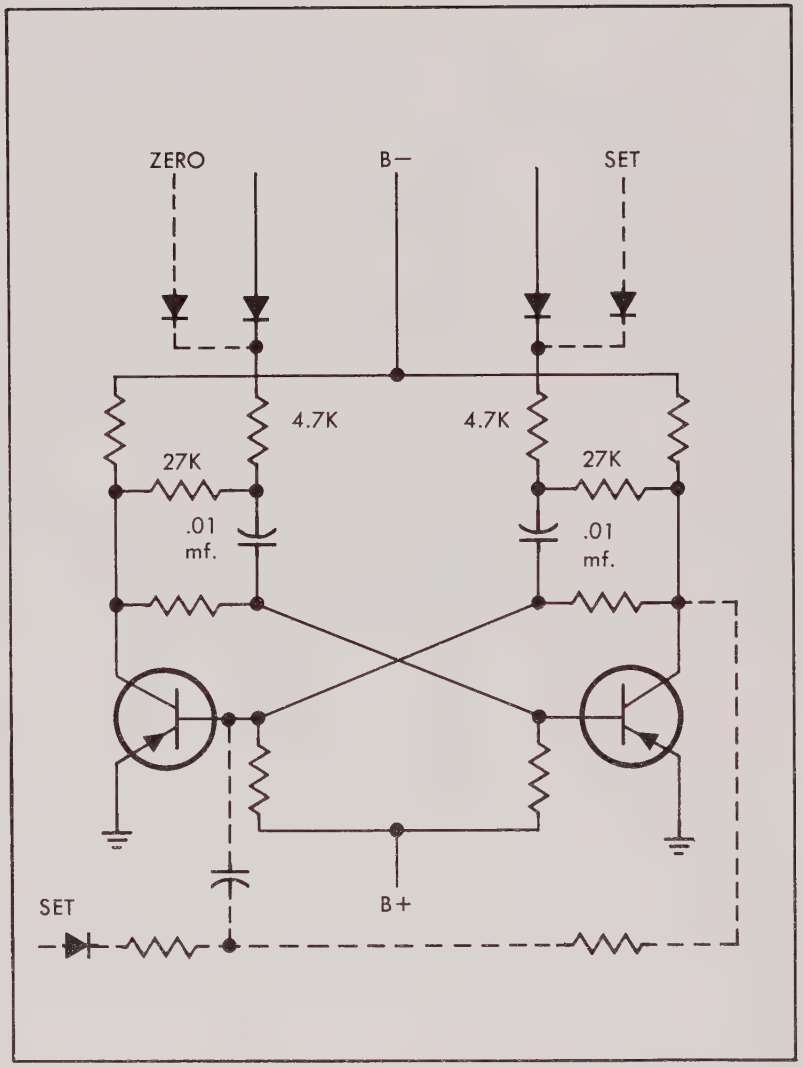

Figure 16. Flip-flop with Trigger.

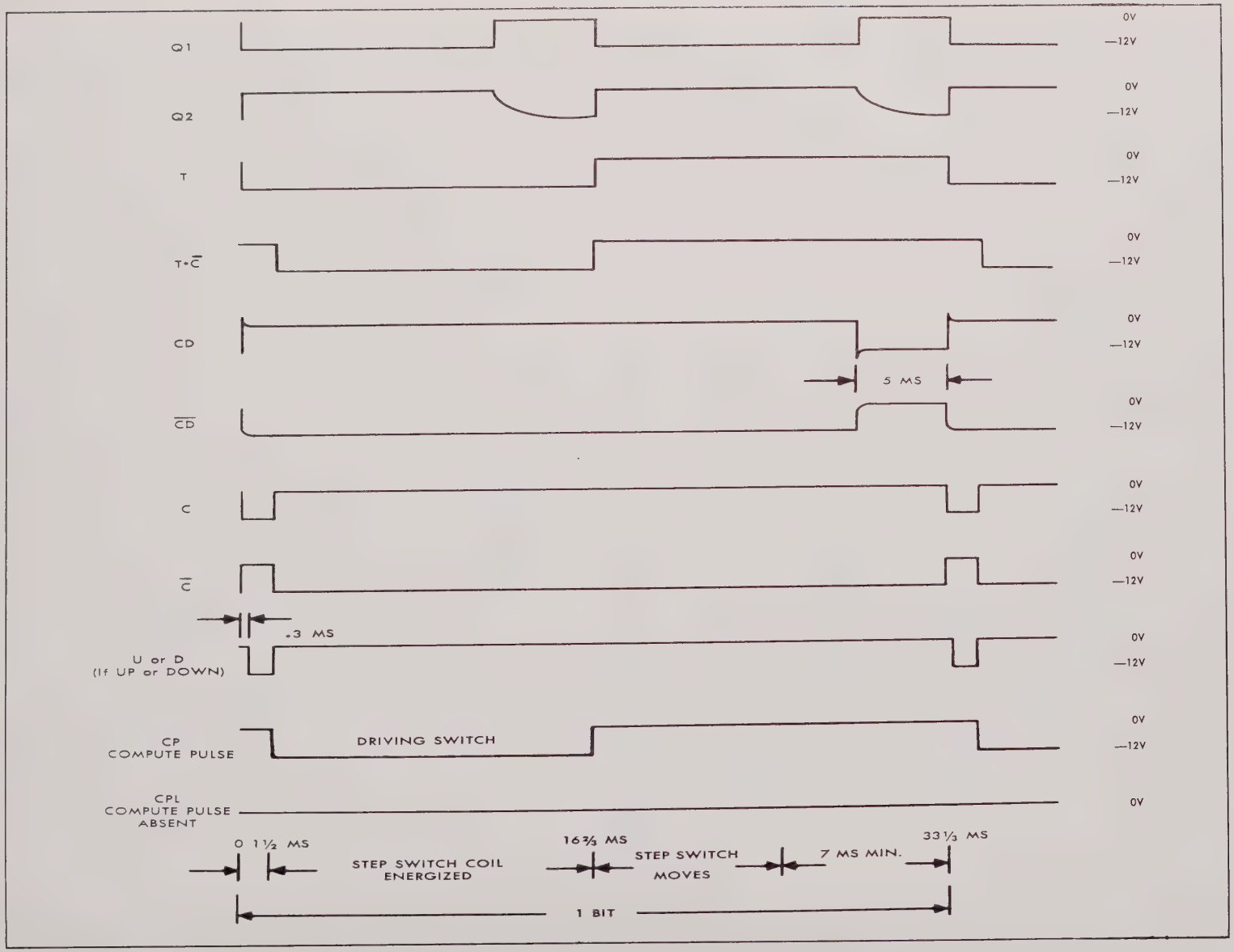

Figure 17. Chart: Timing.

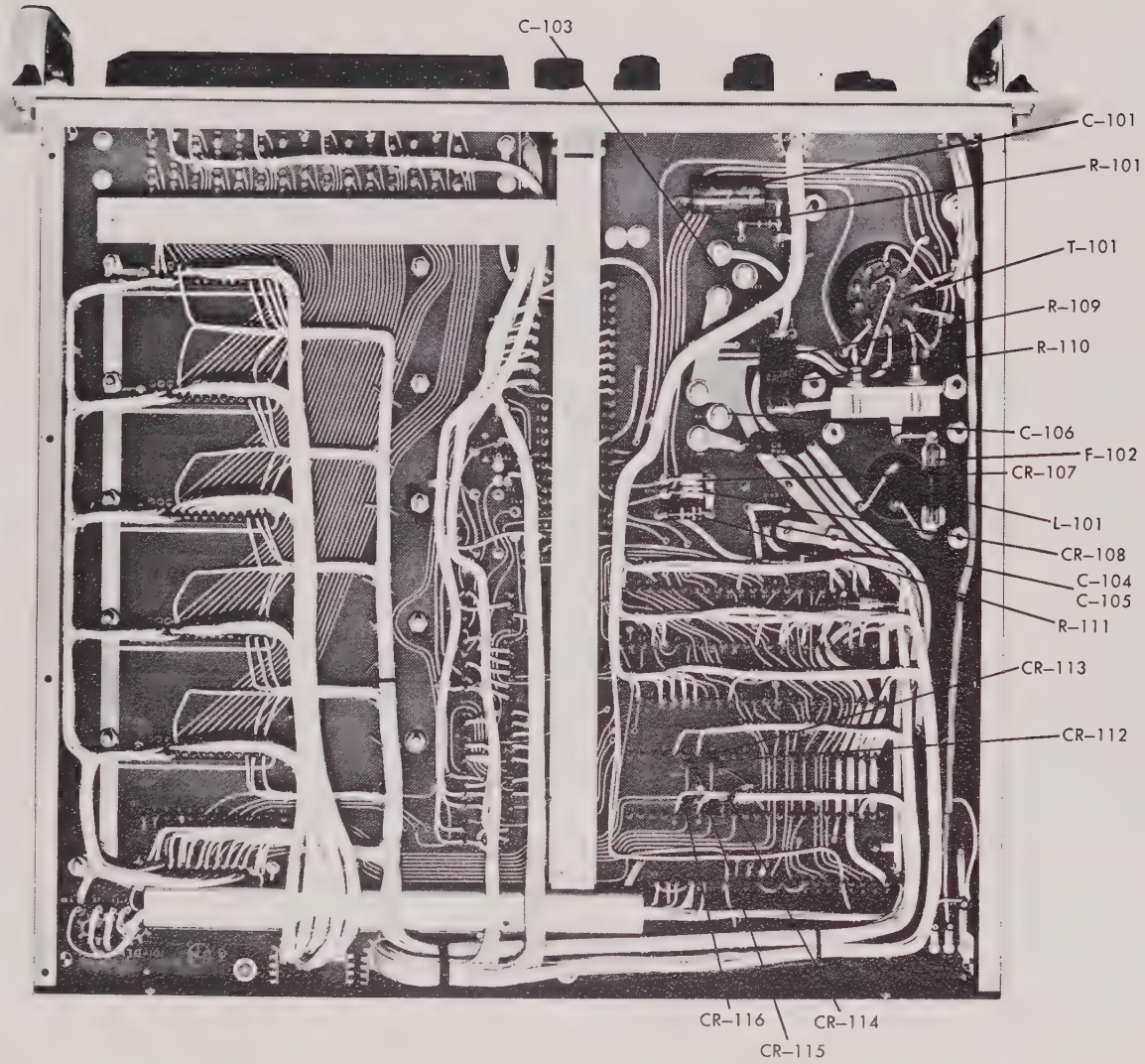

Figure 18. Digital Voltmeter, Bottom View.

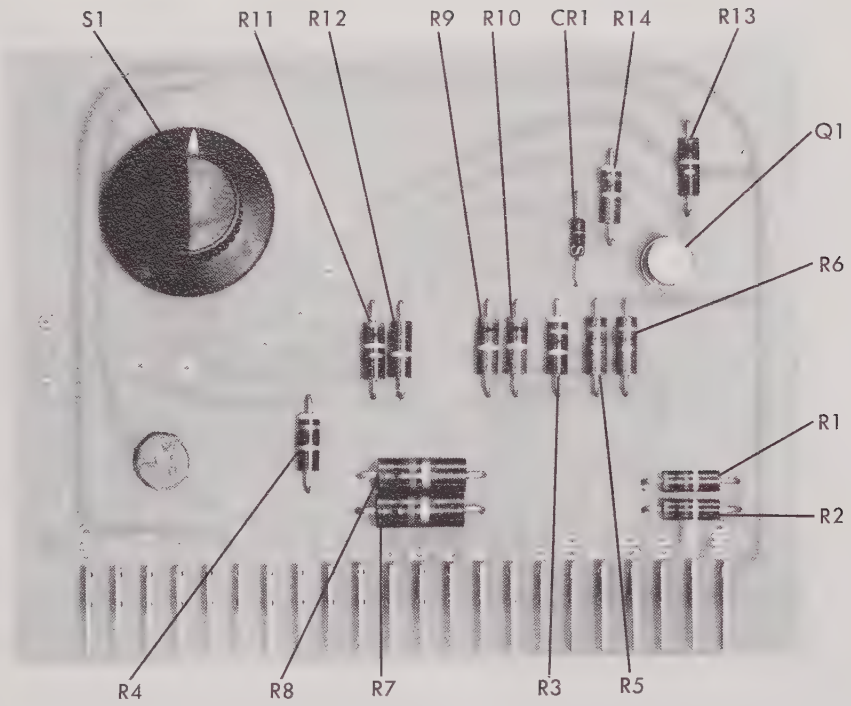

Figure 19. Dummy Amplifier Used to Simulate Error Amplifier.

Test No.	SWITCH POSITIONS			Special Instructions	Dummy Amplifier	FORWARD SCAN			Reverse Scan Completed (C–1)	NOTES:
	Range	Power	Mode			Start (C–1)	Intermediate	Finish (C–6)		
1	AUTO	ON	SS	GROUND $\overline{P}$	U	?	?	+xxxx.x		
2	AUTO	ON	—	GROUND $\overline{P}$	D				+0000.0	
3	AUTO	ON	SS	GROUND $\overline{P}$	D	+0000.0	NO CHANGE	+0.0000		
4	AUTO	ON	—	GROUND $\overline{P}$	$\overline{U}$ $\overline{D}$		NO CHANGE		+9.9990	
5	AUTO	ON	SS	GROUND $\overline{P}$	D	+9.9990	NO CHANGE	+9.9990		
6	AUTO	ON	—	GROUND $\overline{P}$	3 U		NO CHANGE		+9.9999	
7	AUTO	ON	SS	GROUND $\overline{P}$	U	+9.9999	NO CHANGE	+9999.9		
8	AUTO	ON	—	GROUND $\overline{P}$	D		NO CHANGE		+0000.0	
9	AUTO	ON	SS	CLEAR $\overline{P}$, GROUND P	U	−0000.0	NO CHANGE	−0.0000		
10	AUTO	ON	—	CLEAR $\overline{P}$, GROUND P	$\overline{U}$ $\overline{D}$		NO CHANGE		−9.9990	
11	AUTO	ON	SS	CLEAR $\overline{P}$, GROUND P	U	−9.9990	NO CHANGE	−9.9990		
12	AUTO	ON	—	CLEAR $\overline{P}$, GROUND P	3 D		NO CHANGE		−9.9999	
13	AUTO	ON	SS	CLEAR $\overline{P}$, GROUND P	D	−9.9999	NO CHANGE	−9999.9		
14	AUTO	ON	—	CLEAR $\overline{P}$, GROUND P	3 U				−0000.0	
15	AUTO	ON	SS	CLEAR P	D	−0000.0	− 0.0000	−0000.0		
16	AUTO	ON	—		U				−0000.0	
17	AUTO	ON	SS		$\overline{U}$ $\overline{D}$	−0000.0	−0.0000	−0000.0		
18	AUTO	ON	—		U				−0000.0	
19	AUTO	ON	SS		U	−0000.0	−0.0000	+0000.0		
20	AUTO	ON	—		D				+0000.0	
21	AUTO	ON	SS		$\overline{U}$ $\overline{D}$	+0000.0	+0.0000	+0000.0		
22	AUTO	ON	—		D				+0000.0	
23	1000	ON	SS		U	+0000.0	NO CHANGE	+000.00		
24		ON	—		D		NO CHANGE		+000.00	
25	100	ON	SS		U	+000.00	NO CHANGE	+00.000		
26		ON	—		D		NO CHANGE		+00.000	
27	10	ON	SS		U	+00.000	NO CHANGE	+0.0000		
28	10	ON	—		D		NO CHANGE		+0.0000	
29	10	PRINT	SS		U	+0.0000	NO CHANGE	+0.0000		
30	10	PRINT	—		D		NO CHANGE		+0.0000	Print command issued
31	10	PRINT	SS, AUTO, CONT.	Try All Mode Switch Positions	U		N O S C A N			Instrument locked up at C-1 (end of scan)
32	10	ON,–THEN AUTO PRINT	SS		U	+0.0000	NO CHANGE	+0.0000		
33	10	ON,–THEN AUTO PRINT	—		5 D		NO CHANGE		+0.0000	No print com. issued
34	10	ON,–THEN AUTO PRINT	—		5 D	+0.0000	NO CHANGE	−0.0000		Counter will stay at C-6 until "U" is applied
35	10	ON,–THEN AUTO PRINT	—		5 U		NO CHANGE		−0.0000	No print com. issued
36	10	ON,–THEN AUTO PRINT	—		5 U	−0.0000	NO CHANGE	+0.0000		Counter will stay at C-6 until "D" is applied
37	10	ON,–THEN AUTO PRINT	—		3 D THEN $\overline{U}$ $\overline{D}$		NO CHANGE		+0.0000	Print command issued
38	10	ON,–THEN AUTO PRINT	SS, AUTO, CONT.	Try All Mode Switch Positions			N O S C A N			Instrument locked up at C-1 (end of scan)
39	10	ON	St'dby, Then Note 4		NOTE 4	?	?	?	?	

1. Set Function Switch to "DC", all tests.
2. SS = Single Scan; always complete ALL other indicated settings before operating SS.

3 Switch dummy rapidly from previous to indicated position.

4 With dummy amp. (DA) at U D, set mode switch (MS) to auto; no scan should occur. When DA is set to U or D, a scan to C-6 should result. Return MS to st'by and set DA to the opposite position (U or D as req'd); a reverse scan to C-1 should result. With DA at UD, set MS to Cont., a scan to C-6 should result.

5 These lines (2) show the complete cycle initiated by the indicated error pulse. This pulse starts the Rev. scan (from C-6 to C-1) and the presence of the error pulse at ES automatically recycles the Fw'd scan to C-6.

Figure 20. Dummy Amplifier Test Procedure.

TEST NO.		SYMPTOM	COUNTER CONDITIONS	PROBABLE AREA OF TROUBLE	LOCALIZING HINTS & INSTRUCTIONS
1.		Faulty Fwd. Scan	Not at C-1 and not at C-6 initially, or more than one output	11430-731	If more than one counter output is true (C-1 thru C-6) at a time, the fault lies in one of the FF's concerned, or in their drive matrix. With C-1 grounded, approx 6V should be measured across CR-3.
			Stops Before C-6		
			At C-6 initially	11430-731 or 11430-300	CR-28 or associated circuitry on 11430-731 or connections to 11430-300. ES not true; defective ES FF on 11430-300.
			Remains at C-1	11430-731, 11430-300, or 11430-860	Circuits associated with the forward drive line (11430-731), connections to 11430-300; faulty ES, PD or F FF. Proceed to Test No. 39, check pin 10 of 11430-860 for trigger pulse called for by the mode switch position.
2.	a	Faulty Rev. Scan	Remains at C-6	11430-731	Circuits associated with the rev. drive line including gate components, Q-13, C-13, CR-23, CR-25, CR-26, C-12, etc.
				11430-300	LH FF or its triggers, B FF, pin 10 (M-2) should be false, defective turn-around gate (CR's 29, 30, 31, 32, 33 & 36).
				11430-200	(—) FF or CP invert-amp (Q-1 & Q-2).
				11420-500 (Two Boards)	Any fault in any of the 5 amplifiers that would cause the D_1C thru D_5C outputs to be at GND.
	b	Polarity Not +	Reverse to C-1	11420-400	Defective P FF.
				11420-800	K-4 defective.
	c	Decade Runs Continuously	Reverse Scan Will Stop at Faulty Decade	11430-734	"Zero" lamp diode, associated with the decade in question, or wiring is faulty. Example: CR-78 for Decade 5.
	d	One Decade Fails to Run	Reverse to C-1, Scans by Faulty	11430-734	Affected decade drive signal at ground. Example: D_5S may be shorted to GND or open; check CR-80, R-6, R-30 and associated circuitry.
			Decade Without	11420-500	Faulty power amplifier or associated wiring.
			Stopping to Compute	11420-700	Faulty decade or main board connector or wiring.
	e	All Decades Fail to Run	Reverse to C-1	11430-734	No B— to pulling resistors, R-1, R-3, R-5, R-8, R-9 etc.; or (—), LH, or B may be permanently shorted to GND.
				11(5)(4)30-100	No —15V to D board or decades.
3.		Decimal Incorrect	Reverse to C-1	11430-734	Q-3, Q-4 FF not set; check FF and trigger circuitry. Also check Q-1 & Q-2 inverters and associated circuitry.
				11420-800	K-1 and/or K-3, and associated circuitry.
				11420-400	Defective Q and/or R FF, and associated circuitry.
4.	a	Same as 2a	Same as 2a	Same as 2a	Same as test 2a.
	b	Same as 2	Same as 2c	Same as 2c	Same as 2c except nine lamp diodes are involved.

TEST NO.		SYMPTOM	COUNTER CONDITIONS	PROBABLE AREA OF TROUBLE	LOCALIZING HINTS & INSTRUCTIONS
10	c	Same as 2d	Same as 2d	Same as 2d	Same as 2d
	d	Same as 2e	Same as 2e	Same as 2e	Same as 2e
	e	1st Decade Not Zero	Reverse to C-1	11430-734	(+) + (0) diode (CR-48) or associated wiring.
6.	a	1st Decade Still Zero	Reverse to C-1	11430-734	CR-42, CR-43, CR-44, CR-48 grounded or R-22 open (or assoc. circuitry).
12	b	1st Decade Runs Continuously	Reverse to C-1	11430-734	CR-42 or associated wiring open.
7.		Decimal Incorrect	C-6	11420-400	Defective Q and/or R FF or associated circuitry.
13				11420-800	K-1 and/or K-3 or associated circuitry.
				11430-734	CR-87, C-2, CR-28, R-7 or associated circuitry.
8. **14**		Decimal Incorrect (Returned to Test No. 6 Indication)	Reverse to C-1	11430-734	Collector of Q-4 should have gone to ground at C-6, test 6. If not, check C-1, Q-3, Q-4 & associated circuitry. Also check CR-83.
23.		Decimal Incorrect		11420-800	K-1 and/or K-3 or associated circuitry.
				11420-400	CR-6, CR-18 or associated circuitry.
25.		Same as 23		Same as 23	Same as 23 except CR-5 & CR-14.
27.		Same as 23		Same as 23	Same as 23 except CR-4.
30.		No Print Command		11430-300	SH not set, PE not set, PD not set, in that order at end of scan; see Fig. 11. Check circuitry associated with these FF's.
37				11420-400	PC mono stable not firing; check Q-1, Q-2, CR-1 & associated circuitry.
31. **38**		Instrument Scans		11430-300	PD has been reset; check associated circuitry to determine what is reseting PD. CR-44 defective.
33.		Print Command Issued		11430-300	Same as 30; also check CR-43 & associated circuitry. Check for C pulse at pin 1; if absent, check wiring thru print-power switch, S-104.
35				11(4)(5)30-100	Check wiring thru print-power switch, S-104.
39.		No Scan in One or More Modes		11430-860	Check Q-1 & Q-2 and associated circuitry.
				11(4)(5)30-100	Check wiring thru mode switch, S-103.

NOTES:
1. If there is a failure at any test no., check to see that the indicated dummy amplifier error produces the correct error signal at J-103, namely: for + Pol; U = (+) and (+) + (0), $\overline{U}\,\overline{D}$ = (+) + (0) and D = (−). For −Pol; U = (−), $\overline{U}\,\overline{D}$ = (+) + (0) and D = (+) and (+) + (0).
2. Instructions for any specific test no. assume that all previous tests were OK.
3. If Test No's. are omitted, the test has been performed previously, as: steps 15 thru 22 confirm the results of previous steps.
4. The term "Associated Circuitry" means components, etched circuits, connectors and chassis wiring; probability of trouble area is in the order listed.
5. Symptoms, probable area of trouble and instructions are the same for step no's. in **9** and step no's. in 3 on the same line.

Figure 21. Troubleshooting with Dummy Amplifier.

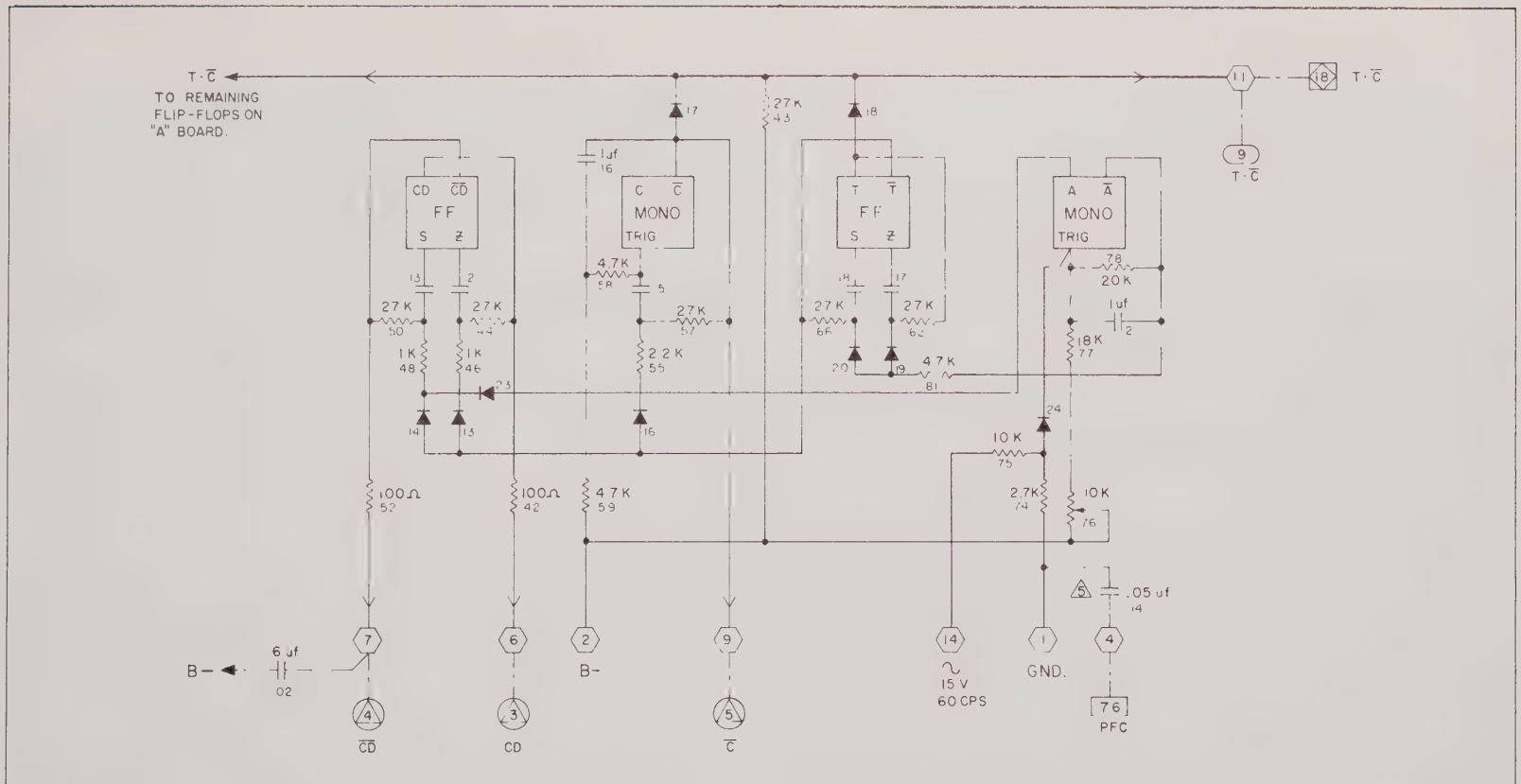

NOTES: 1 TABLE BELOW SHOWS SYMBOLS USED FOR PLUG-IN AND MATING MAIN BOARD CONNECTORS.

SYMBOL	MAIN BD CONN.	PLUG-IN BOARD & EXPLANATION	
A	J 102	"A" BOARD,	11430-200
A	J 107	AMPLIFIER,	11420-600
A	J 103	"B" BOARD,	11430-300
A	J 121	TRIGGER CONTROL,	11430-861
A	J 117	PRINT,	

2. —>— INDICATES DIRECTION OF INFORMATION FLOW
3. ——— INDICATES CHASSIS WIRING.
4. PARTS DESIGNATIONS (R, C, CR) ARE OMITTED. PART NO'S. ARE SHOWN TO AID IN CORRELATION WITH SCHEMATICS AND ASSEMBLY DRAWINGS.
5. C-14 IS THE PRINT FEEDBACK TRIGGER CAPACITOR. IT HAS NOTHING TO DO WITH THE TIMING CIRCUITS.
6. UNLESS OTHERWISE SPECIFIED ALL CAPACITORS ARE .02uf.

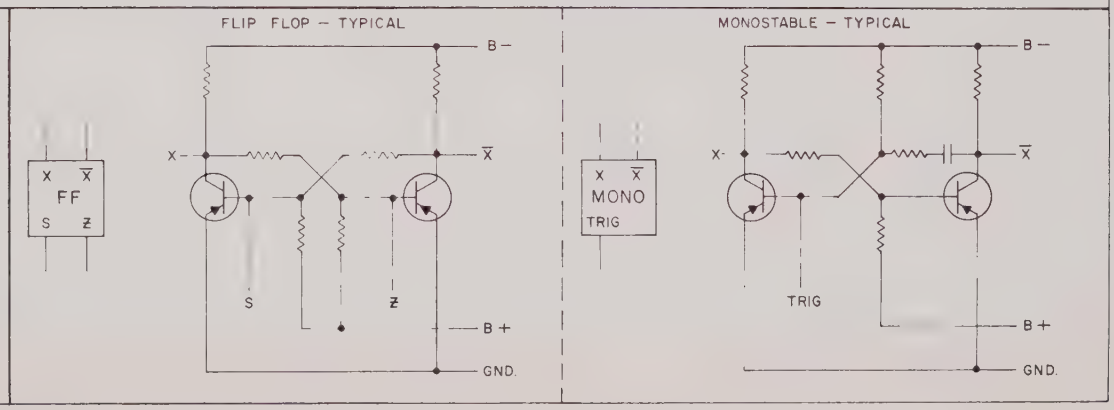

Figure 22. Simplified Schematic & Logic Diagram: Timing Circuits.

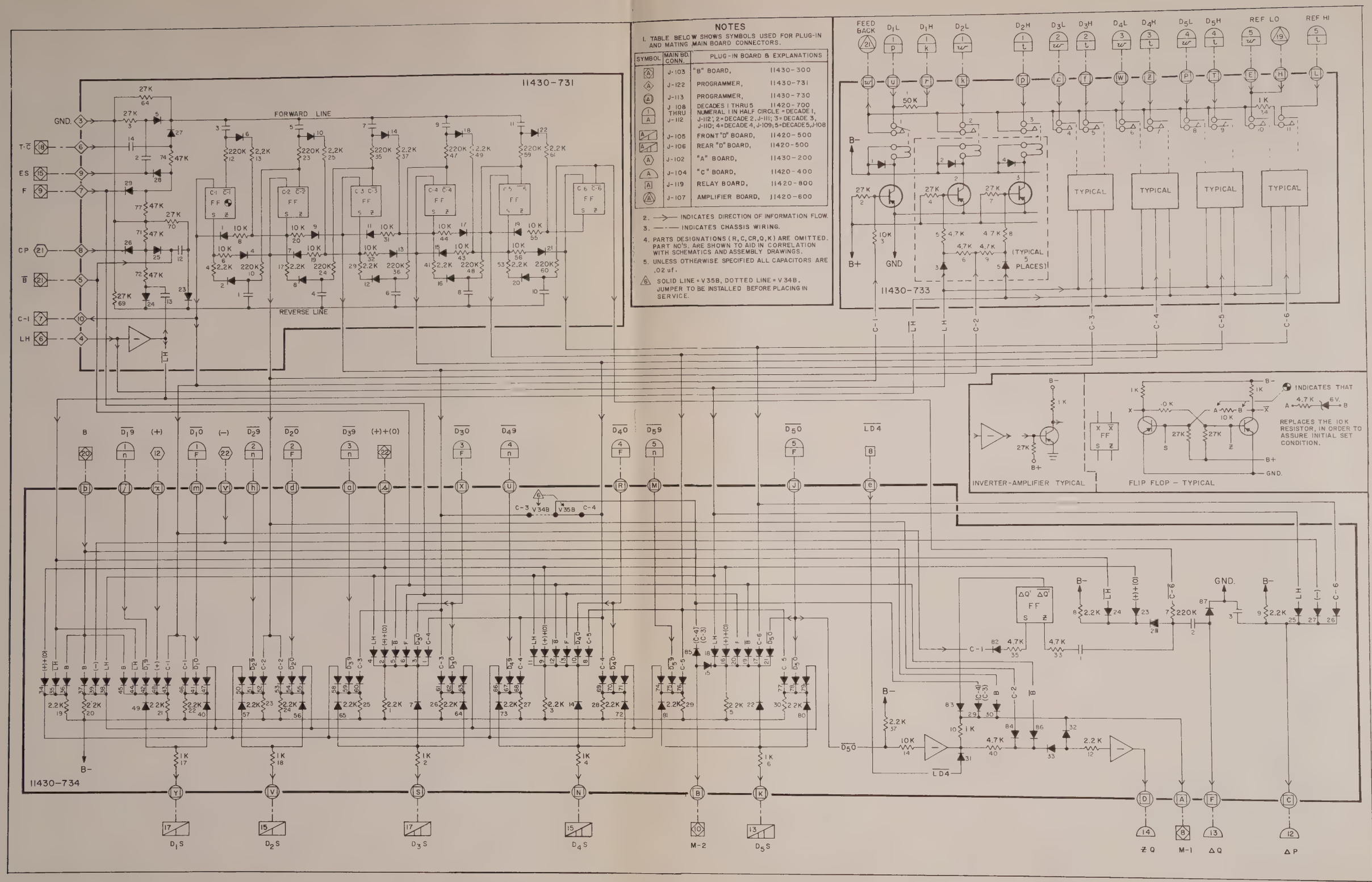

Figure 23. Simplified Schematic & Logic Diagram: Programmer.

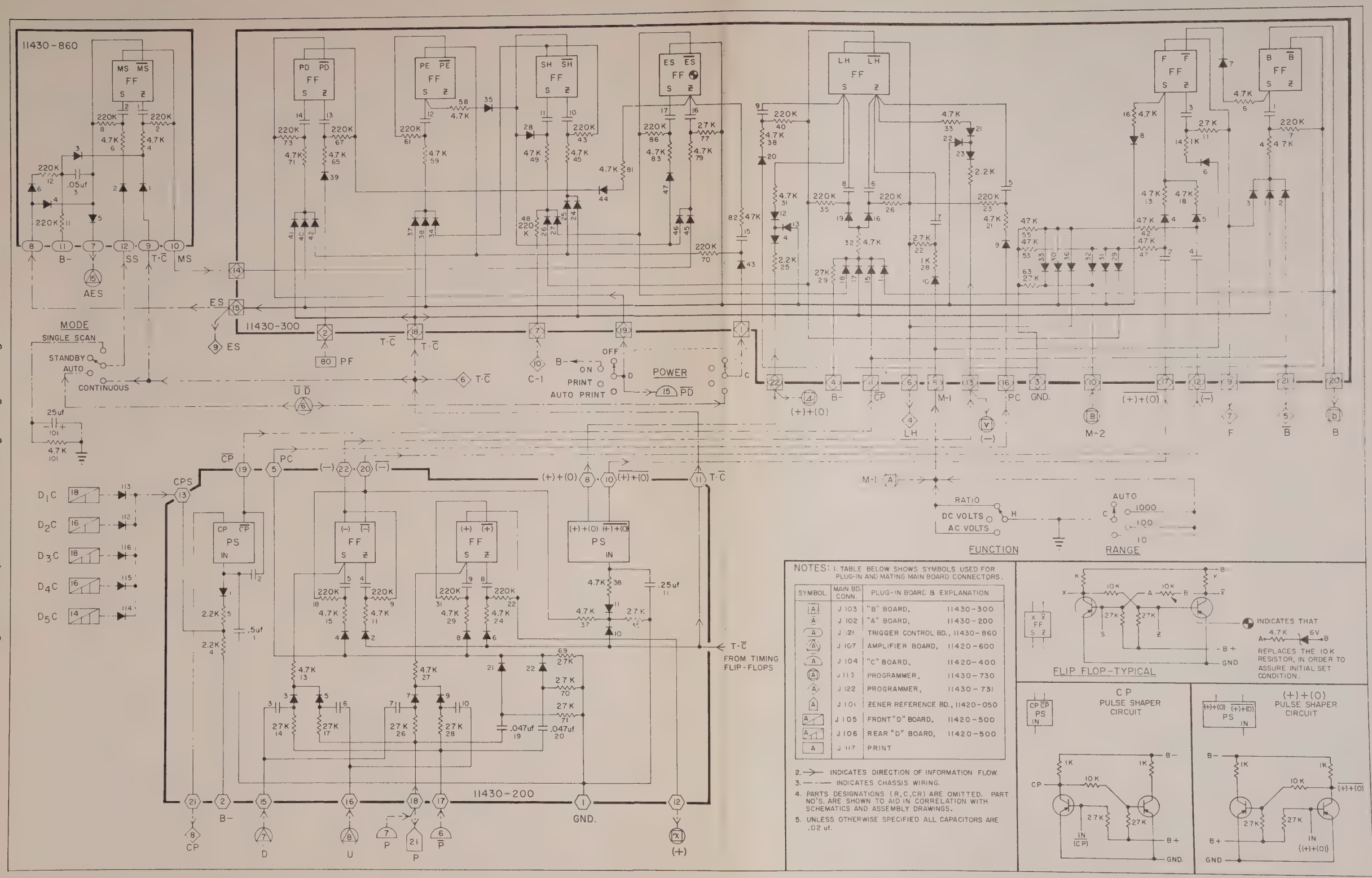

Figure 24. Simplified Schematic & Logic Diagram: Programmer Commands.

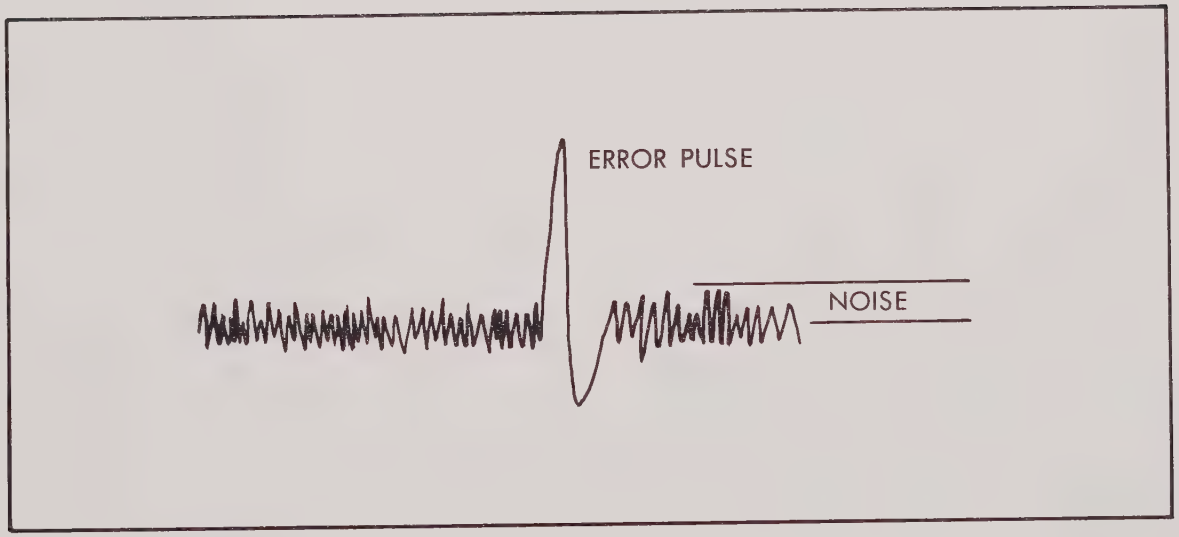

Figure 25. Error Amplifier Output Wave Form.

VOLTS*	JUMPERS	VOLTS*	JUMPERS	VOLTS*	JUMPERS	VOLTS*	JUMPERS
12.631–.619	—	12.312–.300	6–7	11.993–.981	7–8	11.675–.663	6–8
.621–.609	1–2	.302–.280	6–7, 1–2	.983–.971	7–8, 1–2	.665–.653	6–8, 1–2
.611–.599	2–3	.292–.280	6–7, 2–3	.973–.961	7–8, 2–3	.655–.643	6–8, 2–3
.601–.589	1–3	.282–.270	6–7, 1–3	.963–.951	7–8, 1–3	.645–.633	6–8, 1–3
.591–.579	3–4	.272–.260	6–7, 3–4	.953–.941	7–8, 3–4	.635–.623	6–8, 3–4
.581–.569	3–4, 1–2	.262–.250	6–7, 1–2, 3–4	.943–.931	7–8, 3–4, 1–2	.625–.613	6–8, 3–4, 1–2
.571–.559	2–4	.252–.240	6–7, 2–4	.933–.921	7–8, 2–4	.615–.603	6–8, 2–4
.561–.549	1–4	.242–.230	6–7, 1–4	.923–.911	7–8, 1–4	.605–.593	6–8, 1–4
.552–.540	4–5	.232–.220	6–7, 4–5	.914–.902	7–8, 4–5	.595–.583	6–8, 4–5
.542–.530	4–5, 1–2	.222–.210	6–7, 4–5, 1–2	.904–.892	7–8, 4–5, 1–2	.585–.573	6–8, 4–5, 1–2
.532–.520	4–5, 2–3	.213–.201	6–7, 4–5, 2–3	.894–.882	7–8, 4–5, 2–3	.575–.563	6–8, 4–5, 2–3
.522–.510	4–5, 1–3	.203–.191	6–7, 4–5, 1–3	.884–.872	7–8, 4–5, 1–3	.565–.553	6–8, 4–5, 1–3
.512–.500	3–5	.193–.181	6–7, 3–5	.874–.862	7–8, 3–5	.555–.543	6–8, 3–5
.502–.490	3–5, 1–2	.183–.171	6–7, 3–5, 1–2	.864–.852	7–8, 3–5, 1–2	.545–.533	6–8, 3–5, 1–2
.492–.480	2–5	.173–.161	6–7, 2–5	.854–.842	7–8, 2–5	.535–.523	6–8, 2–5
.482–.470	1–5	.163–.151	6–7, 1–5	.844–.832	7–8, 1–5	.525–.513	6–8, 1–5
.472–.460	5–6	.153–.141	5–7	.834–.822	7–8, 5–6	.516–.504	5–8
.462–.450	5–6, 1–2	.143–.131	5–7, 1–2	.824–.812	7–8, 5–6, 1–2	.506–.494	5–8, 1–2
.452–.440	5–6, 2–3	.133–.121	5–7, 2–3	.814–.802	7–8, 5–6, 2–3	.496–.484	5–8, 2–3
.442–.430	5–6, 1–3	.123–.111	5–7, 1–3	.804–.792	7–8, 5–6, 1–3	.486–.474	5–8, 1–3
.432–.420	5–6, 3–4	.113–.101	5–7, 3–4	.794–.782	7–8, 5–6, 3–4	.476–.464	5–8, 3–4
.422–.410	5–6, 3–4, 1–2	.103–.091	5–7, 3–4, 1–2	.784–.772	7–8, 5–6, 3–4, 1–2	.466–.454	5–8, 3–4, 1–2
.412–.400	5–6, 2–4	.093–.081	5–7, 2–4	.774–.762	7–8, 5–6, 2–4	.456–.444	5–8, 2–4
.402–.390	5–6, 1–4	.083–.071	5–7, 1–4	.764–.752	7–8, 5–6, 1–4	.446–.434	5–8, 1–4
.392–.380	4–6	.073–.061	4–7	.754–.742	7–8, 4–6	.436–.424	4–8
.382–.370	4–6, 1–2	.063–.051	4–7, 1–2	.745–.733	7–8, 4–6, 1–2	.426–.414	4–8, 1–2
.372–.360	4–6, 2–3	.053–.041	4–7, 2–3	.735–.723	7–8, 4–6, 2–3	.416–.404	4–8, 2–3
.362–.350	4–6, 1–3	.043–.031	4–7, 1–3	.725–.713	7–8, 4–6, 1–3	.406–.394	4–8, 1–3
.352–.340	3–6	.033–.021	3–7	.715–.703	7–8, 3–6	.396–.384	3–8
.342–.330	3–6, 1–2	.023–.011	3–7, 1–2	.705–.693	7–8, 3–6, 1–2	.386–.374	3–8, 1–2
.332–.320	2–6	.013–.001	2–7	.695–.683	7–8, 2–6	.376–.364	2–8
.322–.310	1–6	12.003–11.991	1–7	.685–.673	7–8, 1–6	.366–.354	1–8

*MEASURED BETWEEN PINS 6 & 5 OF P–802 (ZENER REF. ASSY), WITH *NO* JUMPERS INSTALLED.

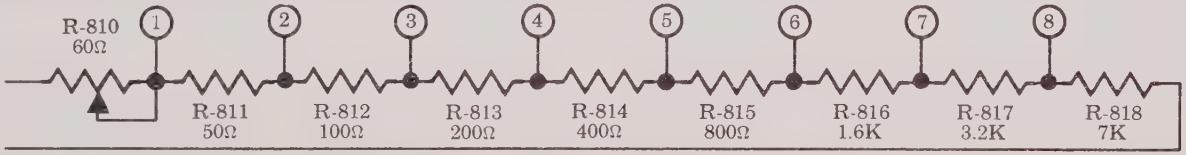

Figure 26. Jumper Connections for 10-Volt Calibrate Resistors.

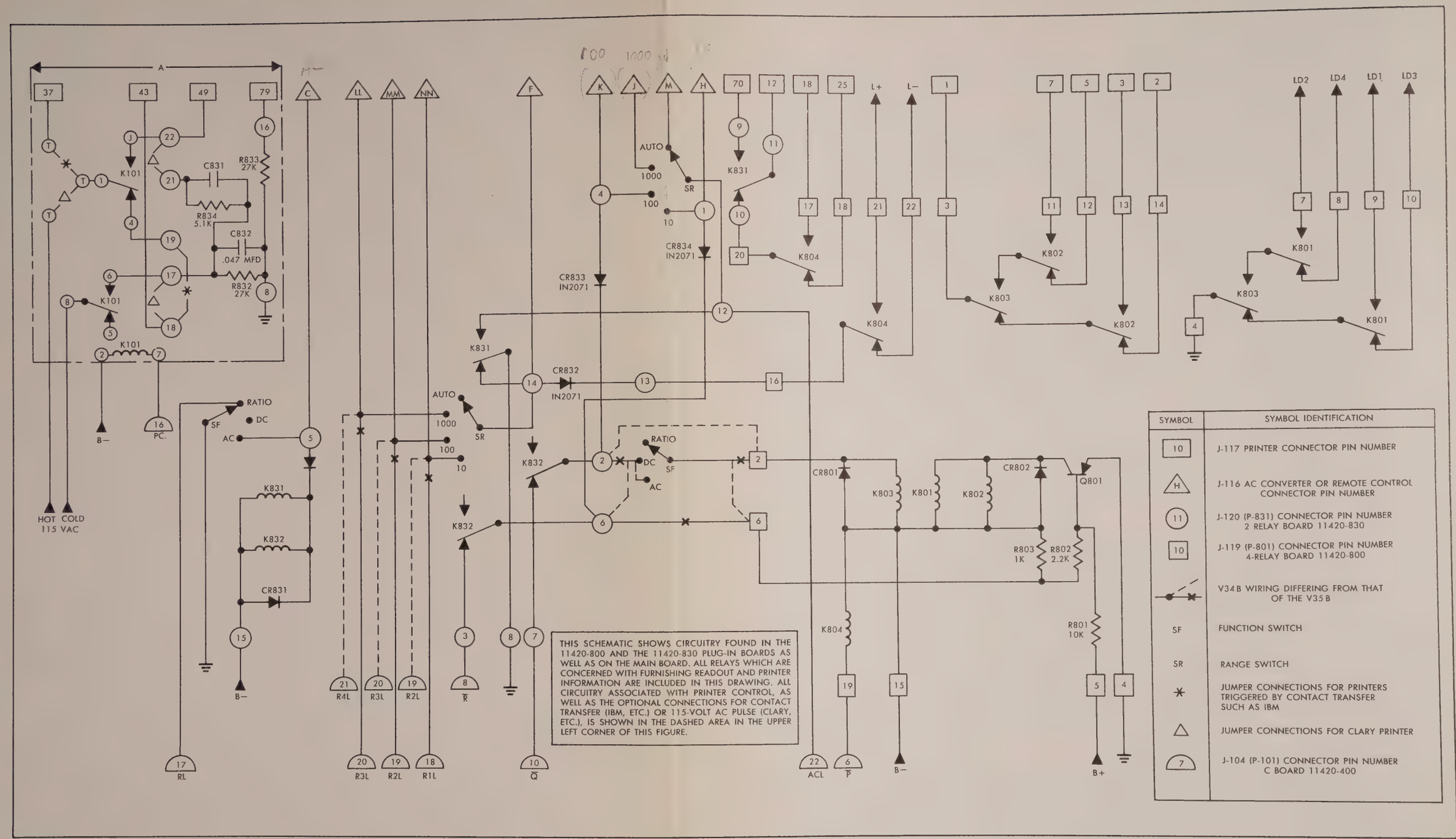

Figure 27. Simplified Schematic: Range & Function Control.

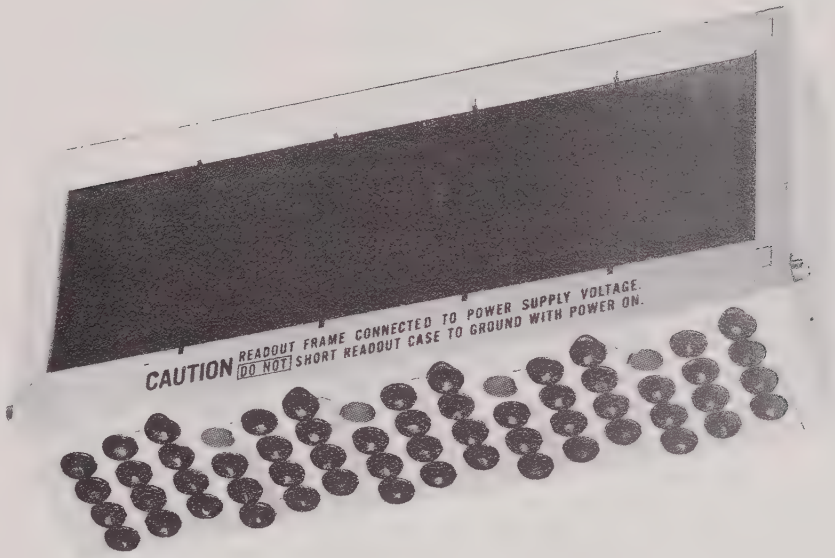

Figure 28. Front View of Readout (without visor) Showing Lamps Correctly Installed.

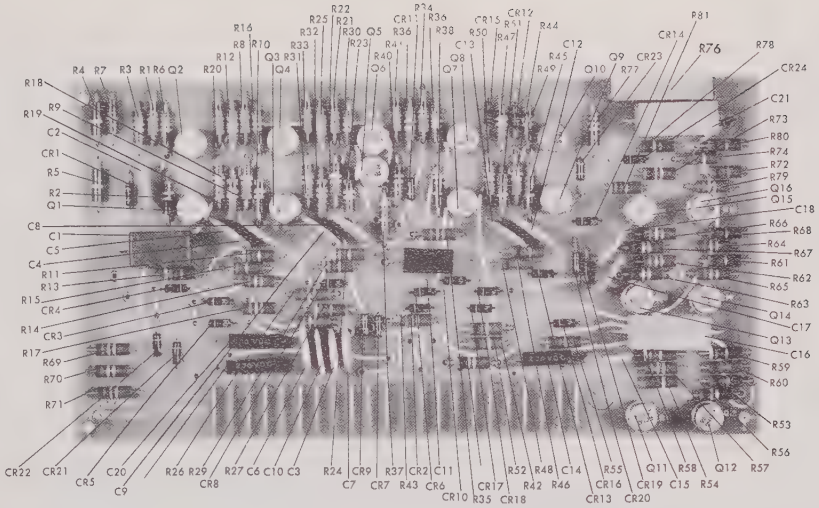

Figure 29. A Board.

CIRCUIT REFERENCE	PART NUMBER	DESCRIPTION	QTY PER UNIT	MANUFACTURER
C2–C10, 12, 13, 15, 17, 18	BT.02	CAPACITOR, .02 Mfd., ±20%	14	RMC
C14, 19, 20	ME2–473E	CAPACITOR, Metalized Paper, .047 Mfd., 200 VDC	3	Electron
C11	ME1–254E	CAPACITOR, Metalized Paper, .25 Mfd., 100 VDC	1	Electron
C1	ME1–504E	CAPACITOR, Metalized Paper, .5 Mfd., 100 VDC	1	Electron
C16, 21	ME1–105	CAPACITOR, Metalized Paper, 1 Mfd., 100 VDC	2	Electron
R76	275–1–103	POTENTIOMETER, 10K	1	Bourns
R9, 18, 22, 31	EB2241	RESISTOR, 220K, ½W, 10%	4	Allen Bradley
R3, 6, 12, 14, 16, 17, 25, 26 R28, 30, 35, 36, 39, 43, 44, 50 R57, 62, 64, 65, 66, 69, 70, 71, 79	EB2731	RESISTOR, 27K, ½W, 10%	25	Allen Bradley
R77	EB1831	RESISTOR, 18K, ½W, 10%	1	Allen Bradley
R78	EB1331	RESISTOR, 20K, ½W, 10%	1	Allen Bradley
R2, 10, 19, 23, 32, 40, 47, 49, 56, 63, 67, 73, 75	EB1031	RESISTOR, 10K, ½W, 10%	13	Allen Bradley
R11, 13, 15, 24, 27, 29, 37, 38, 58, 59, 81	EB4721	RESISTOR, 4.7K, ½W, 10%	11	Allen Bradley
R74	EB2721	RESISTOR, 2.7K, ½W, 10%	1	Allen Bradley
R4, 5, 45, 51, 54, 55	EB2221	RESISTOR, 2.2K, ½W, 10%	6	Allen Bradley
R1, 7, 8, 20, 21, 33, 34 R41, 46, 48, 53, 61, 68, 72, 80	EB1021	RESISTOR, 1K, ½W, 10%	15	Allen Bradley
R60	EB2015	RESISTOR, 200 Ohm, ½W, 10%	1	Allen Bradley
R42, 52	EB1011	RESISTOR, 100 Ohm, ½W, 10%	2	Allen Bradley
CR1–CR24	5003–002	DIODE	24	NLS
Q1–Q16	2N1374	TRANSISTOR	16	T.I.

REVISIONS				
SYM.	EFFECT.	DESCRIPTION	DATE	APPROVAL

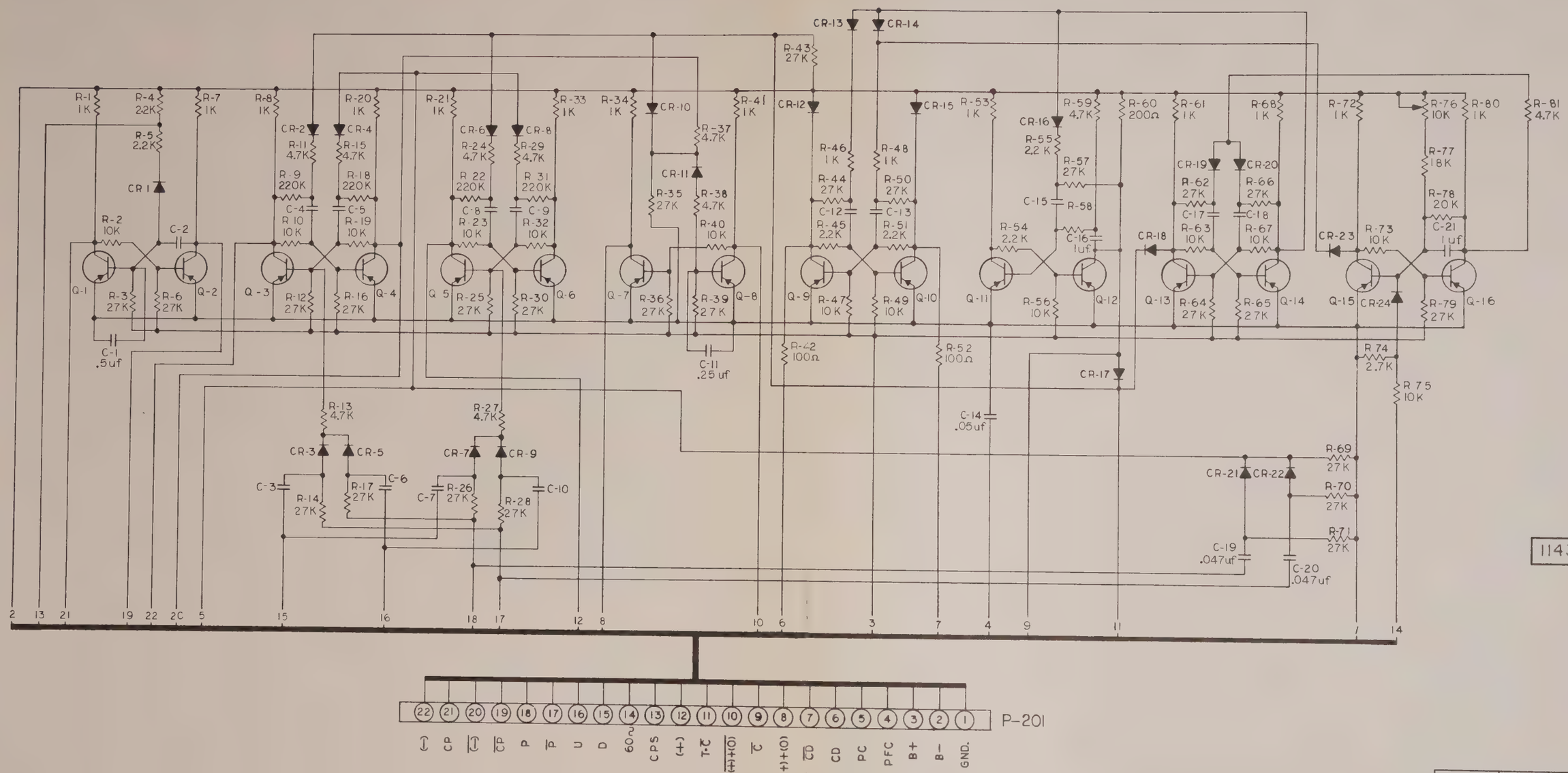

3. TRANSISTORS ARE TYPE 2N1374
2. CAPACITORS ARE .02 uf
1. ALL DIODES ARE NLS TYPE 5003-002

NOTES: UNLESS OTHERWISE SPECIFIED

NEXT ASSY	USED ON	NEXT ASSY	FINAL ASSY
APPLICATION		QTY REQD	

UNLESS OTHERWISE SPECIFIED
DIMENSIONS ARE IN INCHES
TOLERANCES ON
FRACTION ± DECIMAL ± ANGLES ±
MATERIAL

DRAWN BY R. COLLETTA DATE 6-9-61
CHECKED BY DATE
APPROVED BY R. Holcombe DATE 9-7-61
FINISH

TITLE SCHEMATIC "A" BOARD ASS'Y.

V 34B / V 35B

SCALE WT.

NON-LINEAR SYSTEMS INC.
DEL MAR AIRPORT
DEL MAR, CALIFORNIA

DRAWING NUMBER 11430-200

SHEET 2 OF 2

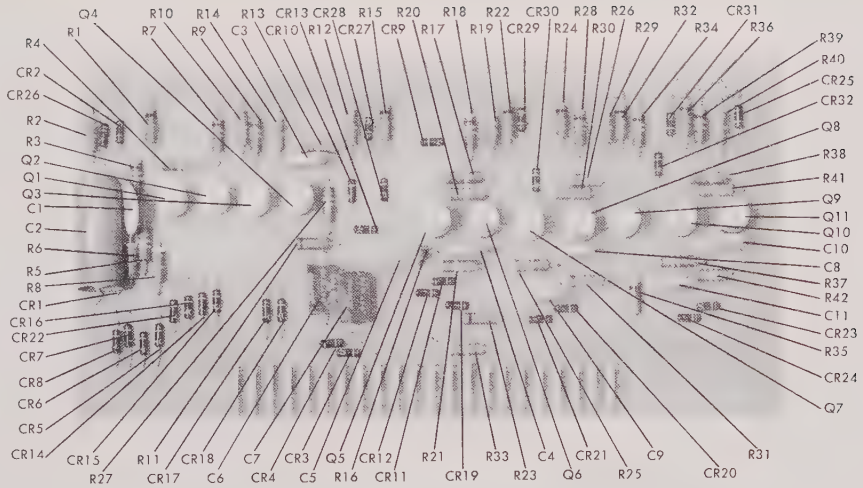

Figure 31. C Board.

CIRCUIT REFERENCE	PART NUMBER	DESCRIPTION	QTY PER UNIT	MANUFACTURER
R16, R21	EB2241	RESISTOR, 220K, ½ W, 10%	2	Allen Bradley
R5, R25, R27, R31, R37, R42	EB2731	RESISTOR, 27K, ½ W, 10%	6	Allen Bradley
R3, R7, R9, R18, R28, R34, R39	EB1031	RESISTOR, 10K, ½ W, 10%	7	Allen Bradley
R2, R6, R8, R14, R19, R29, R33, R40	EB4721	RESISTOR, 4.7K, ½ W, 10%	8	Allen Bradley
R4, R10, R12, R13, R20, R30, R41	EB2221	RESISTOR, 2.2K, ½ W, 10%	7	Allen Bradley
R17, R26, R38	EB1521	RESISTOR, 1.5K, ½ W, 10%	3	Allen Bradley
R1, R11, R15, R22, R23, R24, R32, R35, R36	EB1021	RESISTOR, 1K, ½ W, 10%	9	Allen Bradley
C2	52RM25	CAPACITOR, Electrolytic, 25 Mfd. 25 VDC	1	Ind. Cond.
C1, C3, C4, C5, C8, C9, C10, C11	BT.02	CAPACITOR, .02 Mfd., ± 20%, 100 VDC	8	RMC
C6, C7	DEZ 473E	CAPACITOR, Metalized Mylar, .047 Mfd., 200 VDC	2	Electron
CR1 thru CR32	5003–002	DIODE	32	NLS
Q1 thru Q11	2N1374	TRANSISTOR	11	T.I.

REVISIONS				
SYM.	EFFECT.	DESCRIPTION	DATE	APPROVAL
1		R 14 & R 29 WERE 4.7K	12-4-61	AXH

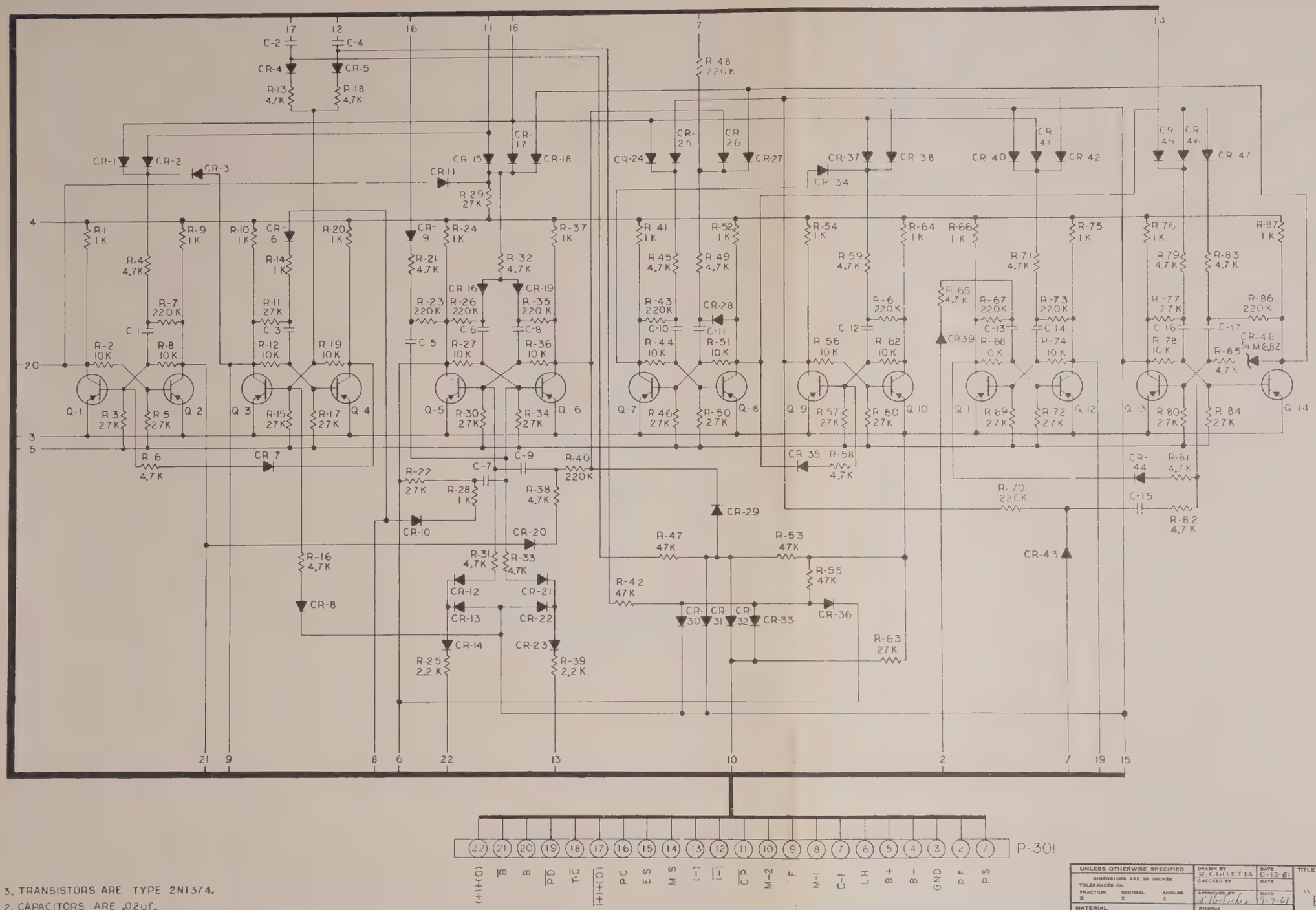

11430-300
1

3. TRANSISTORS ARE TYPE 2N1374.
2. CAPACITORS ARE .02uf.
1. DIODES ARE N.L.S. TYPE 5003-002.

NOTES: UNLESS OTHERWISE SPECIFIED

NEXT ASSY	USED ON	NEXT ASSY	FINAL ASSY
APPLICATION		QTY REQD	

UNLESS OTHERWISE SPECIFIED
DIMENSIONS ARE IN INCHES
TOLERANCES ON
FRACTION ± DECIMAL ± ANGLES ±
MATERIAL

DRAWN BY R. COLLETTA DATE 6-13-61
CHECKED BY DATE
APPROVED BY DATE 9-7-61
FINISH

TITLE
SCHEMATIC
"B" BOARD ASS'Y.
V 34B/V 35B
SCALE WT.

NON-LINEAR SYSTEMS INC.
DEL MAR AIRPORT
DEL MAR, CALIFORNIA

DRAWING NUMBER
11430-300
SHEET 2 OF 2

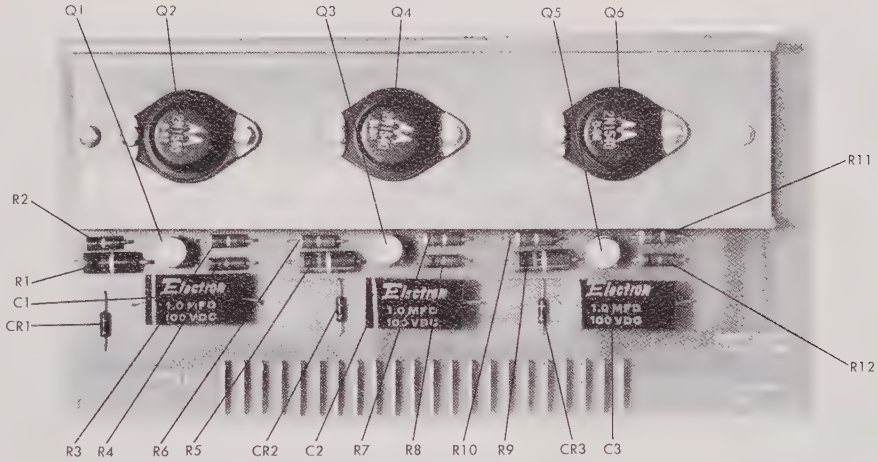

11420–500 D BOARD

Figure 33. D Board (Instrument uses Two D Boards).

CIRCUIT REFERENCE	PART NUMBER	DESCRIPTION	QTY PER UNIT	MANUFACTURER
C1, C2, C3	ME1–105	CAPACITOR, Met. Paper, 1 Mfd., 100 VDC	3	Electron
R2, R3, R6, R7, R10, R11	EB4721	RESISTOR, 4.7K Ohm, ½ W, 10%	6	Allen Bradley
R4, R8, R12	EB1021	RESISTOR, 1K Ohm, ½ W, 10%	3	Allen Bradley
R1, R5, R9	GB1011	RESISTOR, 100 Ohm, 1W, 10%	3	Allen Bradley
CR1, CR2, CR3	5003–002	DIODE	3	NLS
Q2, Q4, Q6	2N1540	TRANSISTOR	3	Motorola
Q1, Q3, Q5	2N1374	TRANSISTOR	3	T.I.

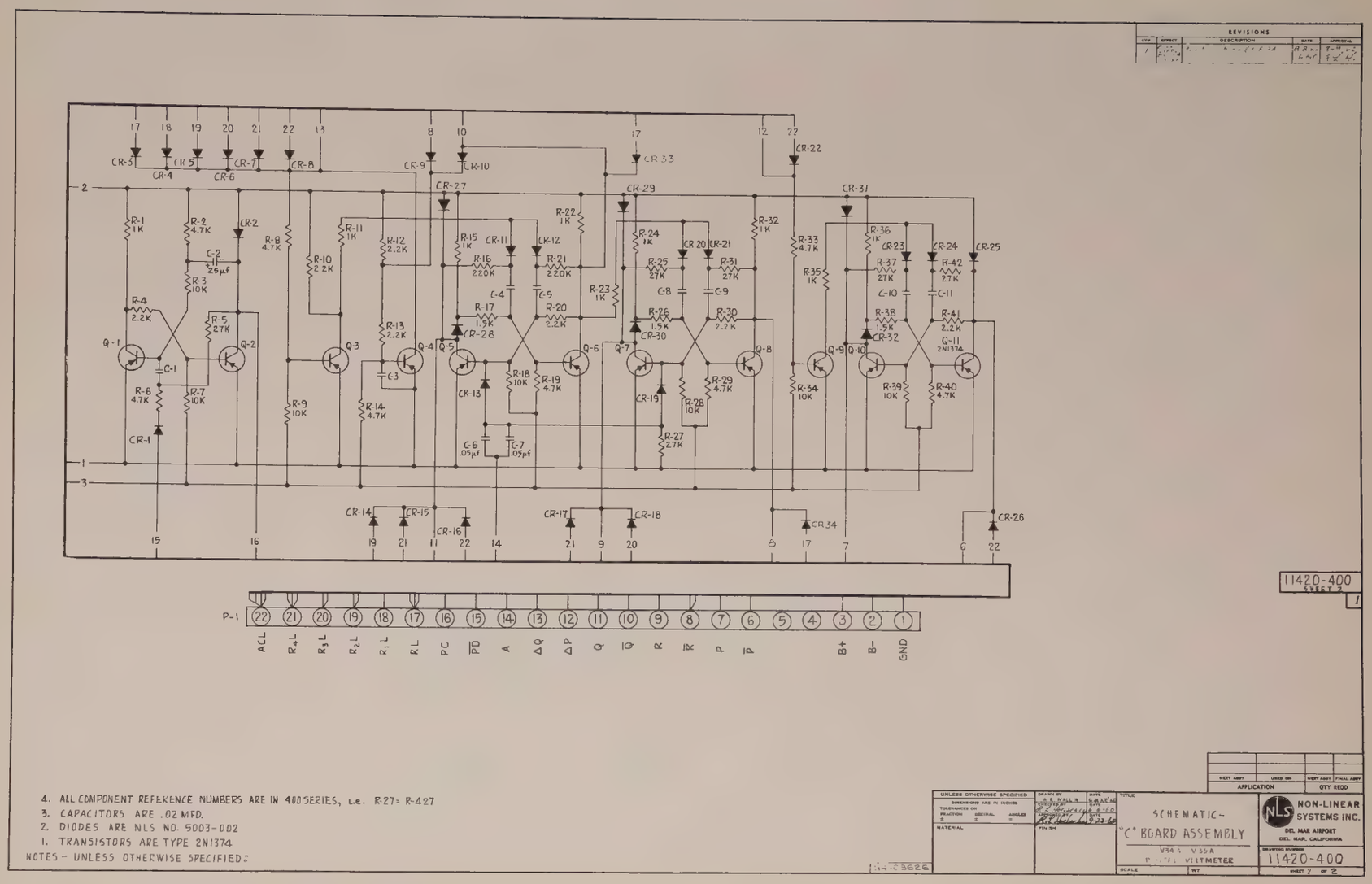

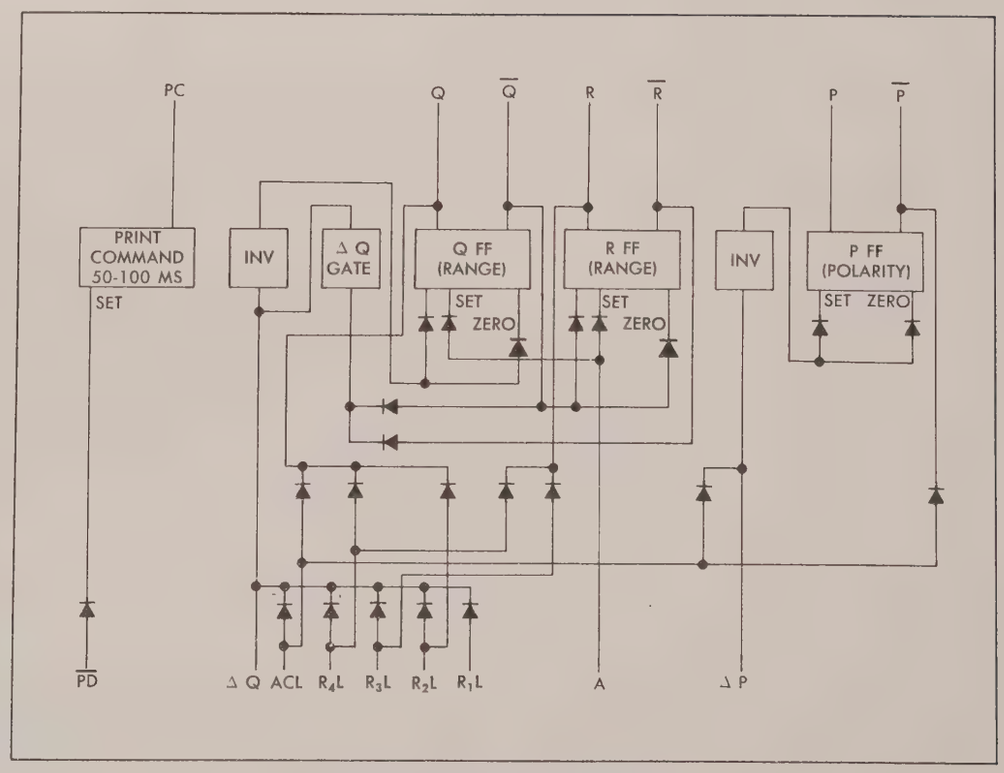

Figure 32. C Board Block Diagram.

11420–400 C BOARD

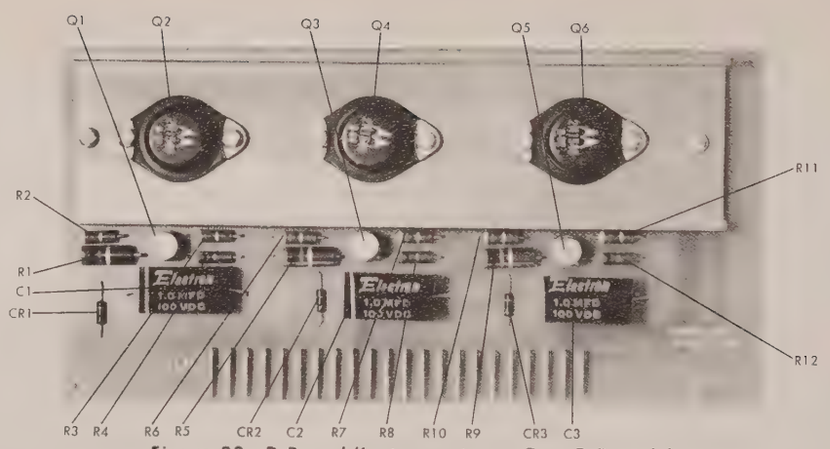

11420–500 D BOARD

Figure 33. D Board (Instrument uses Two D Boards).

CIRCUIT REFERENCE	PART NUMBER	DESCRIPTION	QTY PER UNIT	MANUFACTURER
C1, C2, C3	ME1–105	CAPACITOR, Met. Paper, 1 Mfd., 100 VDC	3	Electron
R2, R3, R6, R7, R10, R11	EB4721	RESISTOR, 4.7K Ohm, ½ W, 10%	6	Allen Bradley
R4, R8, R12	EB1021	RESISTOR, 1K Ohm, ½ W, 10%	3	Allen Bradley
R1, R5, R9	GB1011	RESISTOR, 100 Ohm, 1W, 10%	3	Allen Bradley
CR1, CR2, CR3	5003–002	DIODE	3	NLS
Q2, Q4, Q6	2N1540	TRANSISTOR	3	Motorola
Q1, Q3, Q5	2N1374	TRANSISTOR	3	T.I.

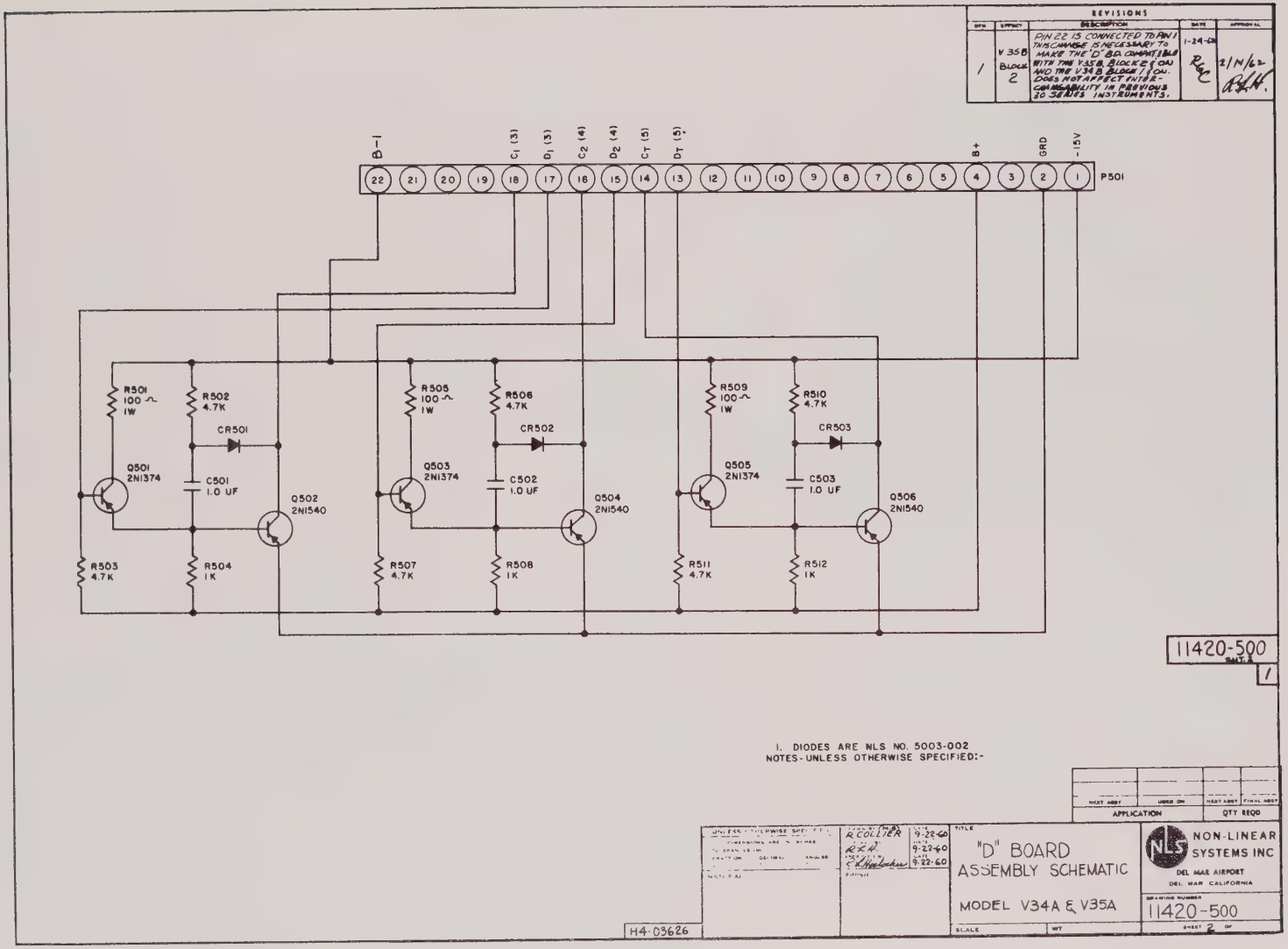
REVISIONS
DIN 22 IS CONNECTED TO PIN 1 THIS CHANGE IS NECESSARY TO MAKE THE "D" BD. COMPATIBLE WITH THE V35B, BLOCK 2 ON AND THE V34B, BLOCK 1 ON. DOES NOT AFFECT INTER-CHANGEABILITY IN PREVIOUS 30 SERIES INSTRUMENTS.
B-1
C1 (3)
D1 (3)
C2 (4)
D2 (4)
CT (5)
DT (5)
B+
GRD
-15V
P501
R501 100 Ω 1W
R502 4.7K
CR501
Q501 2N1374
C501 1.0 UF
Q502 2N1540
R503 4.7K
R504 1K
R505 100 Ω 1W
R506 4.7K
CR502
Q503 2N1374
C502 1.0 UF
Q504 2N1540
R507 4.7K
R508 1K
R509 100 Ω 1W
R510 4.7K
CR503
Q505 2N1374
C503 1.0 UF
Q506 2N1540
R511 4.7K
R512 1K
11420-500
1
1. DIODES ARE NLS NO. 5003-002
NOTES-UNLESS OTHERWISE SPECIFIED:-
APPLICATION
QTY REQD
R. COLLTER
"D" BOARD
ASSEMBLY SCHEMATIC
MODEL V34A & V35A
NON-LINEAR SYSTEMS INC
DEL MAR AIRPORT
DEL MAR CALIFORNIA
11420-500
H4-03626

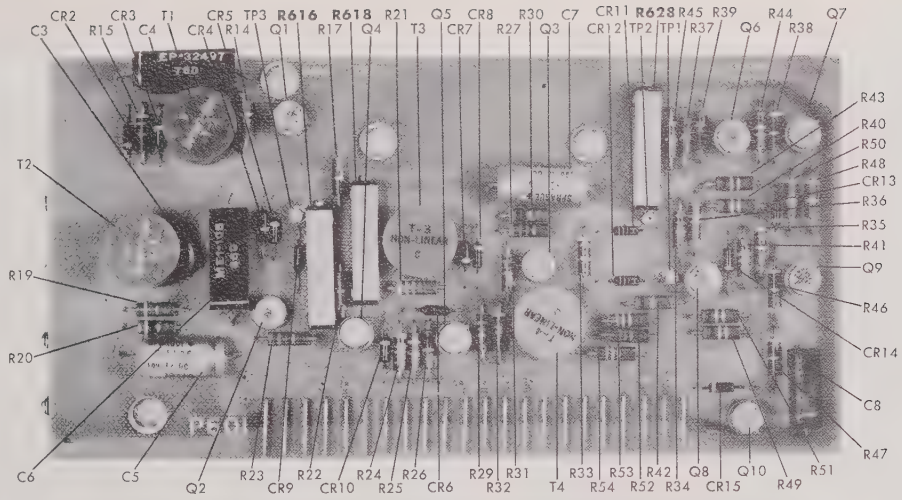

Figure 34. Amplifier, Front View.

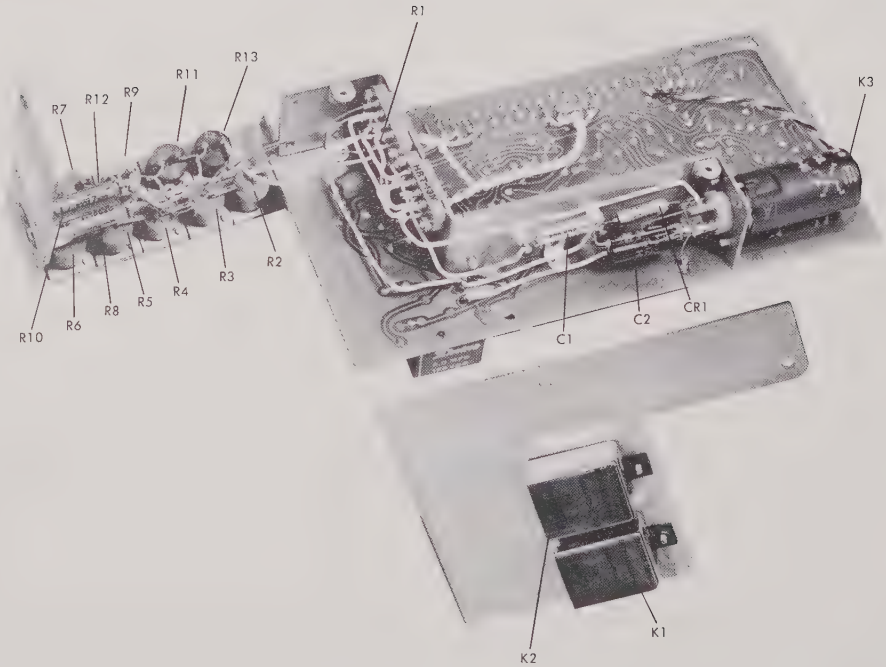

Figure 35. Amplifier, Rear View (partially disassembled).

REVISIONS				
SYM	EFFECT	DESCRIPTION	DATE	APPROVAL
1	ALL	K-1 & K-2 PIN NO'S CHANGED: FOLLOWS 6-7, 7-16, 2-TD4, 4-TD3.	25 Jan 60 RDL	7-26-66
2	ALL	Added type No's Q4 & Q5. Q10 was 2N185.	22 Sept 60 RDL	9-22-60

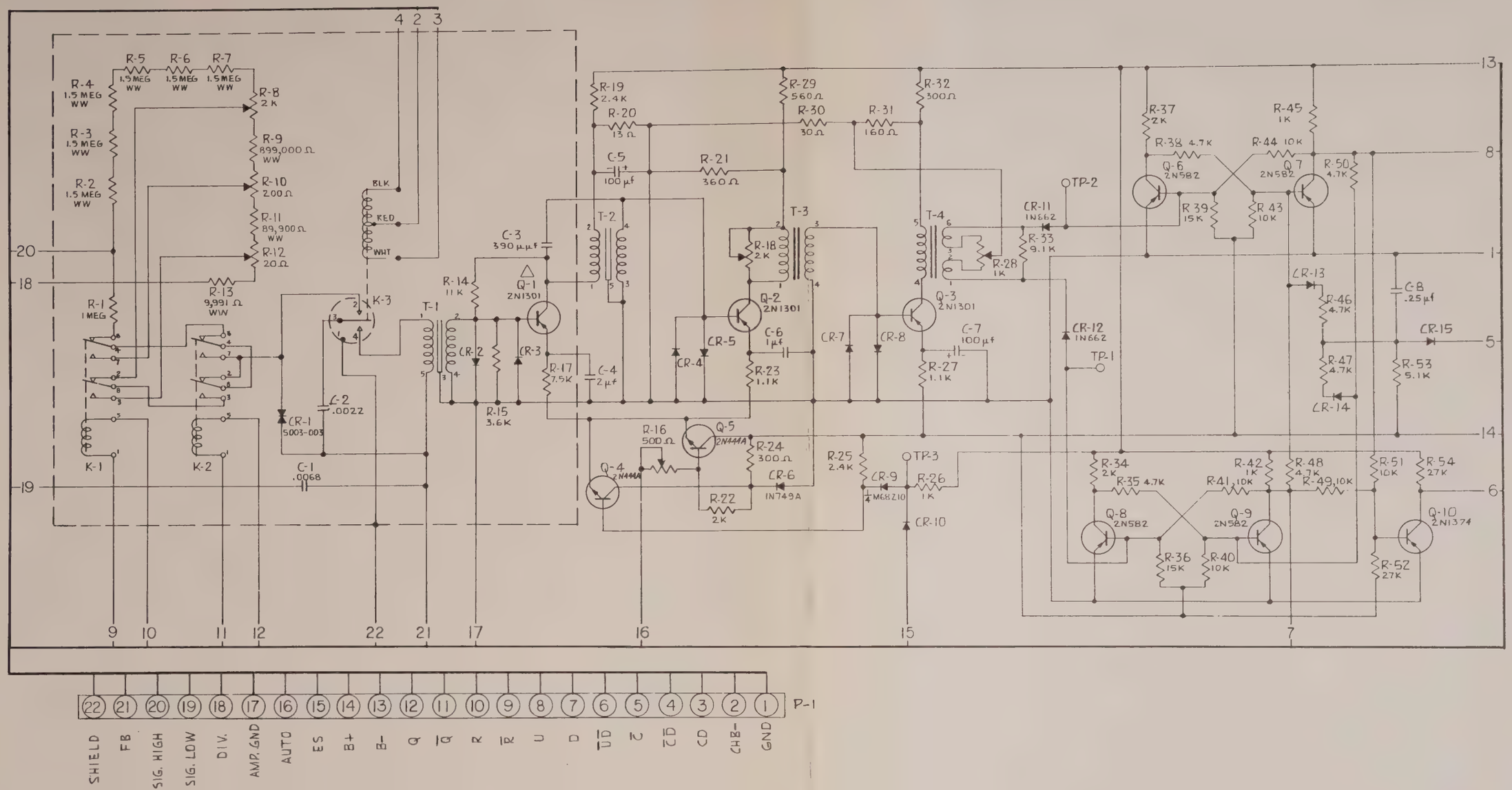

11420-EC.0 SHEET 2

2

⚠ SELECTED FOR LOW NOISE.
3. ALL COMPONENT REF. NUMBERS ARE IN THE 600 SERIES; i.e. P-1 = P-601
2 DIODES ARE TYPE 5003-002.
1. CAPACITOR VALUE IS IN MICROFARADS.
NOTES: UNLESS OTHERWISE SPECIFIED:

NEXT ASSY	USED ON	NEXT ASSY	FINAL ASSY
APPLICATION		QTY REQD	

UNLESS OTHERWISE SPECIFIED
DIMENSIONS ARE IN INCHES
TOLERANCES ON
FRACTION ± DECIMAL ± ANGLES ±
MATERIAL

DRAWN BY A. E. WALLIN DATE 6 7 60
CHECKED BY P. L. HEELSCHER DATE 6-29-60
APPROVED BY H. Clement DATE 6-30-60
FINISH

TITLE
SCHEMATIC-
AMPLIFIER BD. ASSEM.
V34A V35A
DIGITAL VOLTMETER

SCALE WT

NON-LINEAR SYSTEMS INC.
DEL MAR AIRPORT
DEL MAR, CALIFORNIA

DRAWING NUMBER 11420-600
SHEET 2 OF

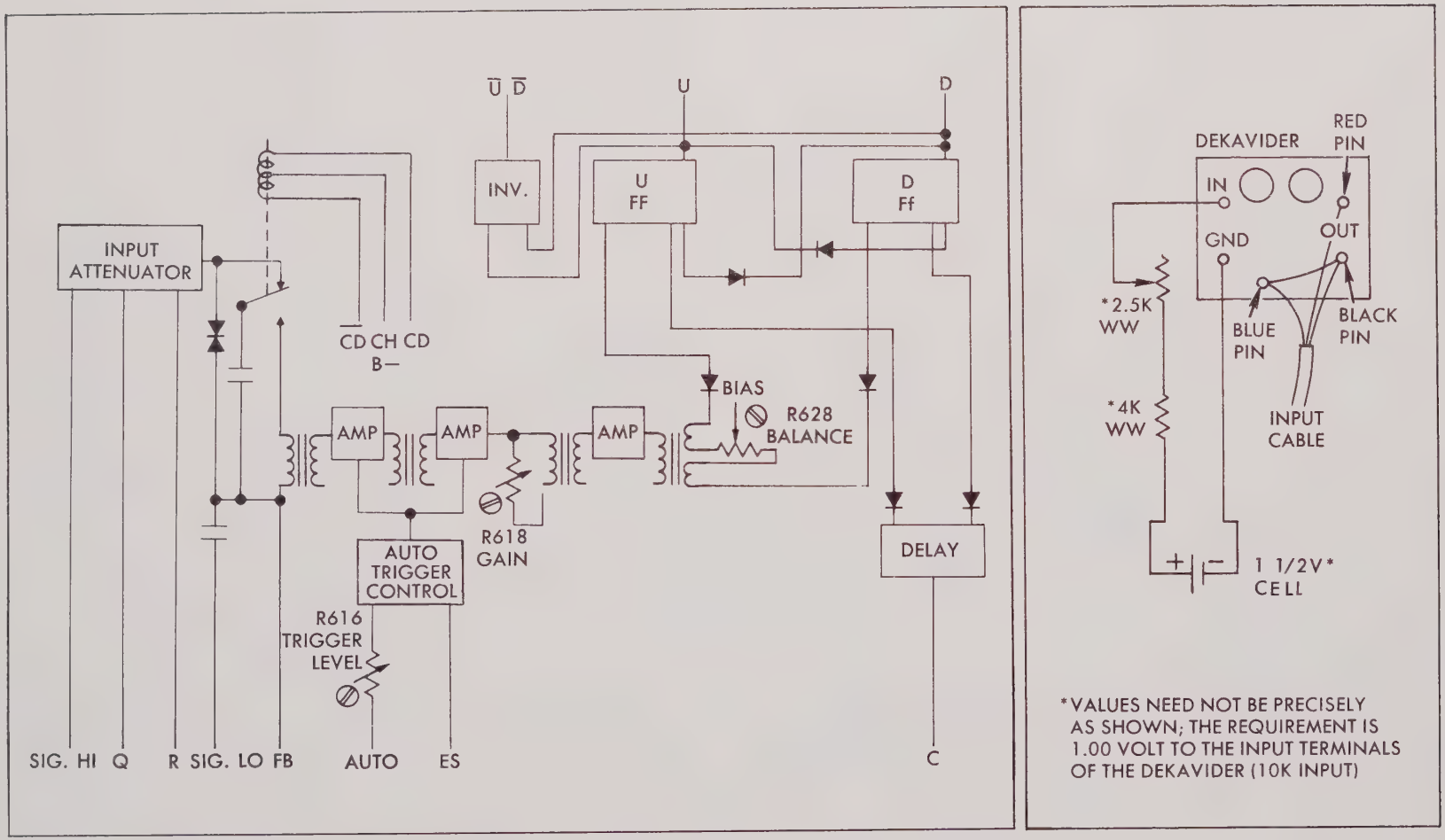

Figure 36. Amplifier Block Diagram and Voltage Source for Test.

CIRCUIT REFERENCE	PART NUMBER	DESCRIPTION	QTY PER UNIT	MANUFACTURER
T1	11420–607	TRANSFORMER, Isolation	1	NLS
T2	11420–608	TRANSFORMER, Input	1	NLS
T3	11420–609	TRANSFORMER, Interstage	1	NLS
T4	11420–610	TRANSFORMER, Output	1	NLS
Q1, 2, 3	2N1301	TRANSISTOR	3	RCA
Q6, 7, 8, 9	2N582	TRANSISTOR	4	RCA
Q10	2N1374	TRANSISTOR	1	TI
Q4, 5	2N444A	TRANSISTOR	2	GT
CR11, 12	1N662	DIODE	2	Transitron
CR2–5, 7, 8, 10, 13, 14, 15	5003–002	DIODE	10	NLS
CR6	1N749A	DIODE	1	TI
CR9	¼M6.8Z10	DIODE	1	Motorola
C5, 7	TE 1135	CAPACITOR, Electrolytic, 100 Mfd, 12 VDCW	2	Sprague
C4	5002–001	CAPACITOR	1	NLS
C6	ME1–105	CAPACITOR, Metalized Paper, 1 Mfd, 100 VDCW	1	Electron
C8	ME1–254E	CAPACITOR, Metalized Paper, .25 Mfd, 10%, 100 VDCW	1	Electron
C3	DD391	CAPACITOR, Ceramic, 390 Mfd, 10%, 1000 VDCW	1	Centralab
R16	275–1–501	POTENTIOMETER, 500 Ohm	1	Bourns
R28	275–1–102	POTENTIOMETER, 1 K Ohm	1	Bourns
R18	275–1–202	POTENTIOMETER, 2 K Ohm	1	Bourns
R31	EB 1615	RESISTOR, 160 Ohm, ½W, 5%	1	Allen Bradley
R24, 32	EB 3015	RESISTOR, 300 Ohm, ½W, 5%	2	Allen Bradley
R21	EB 5615	RESISTOR, 360 Ohm, ½W, 5%	1	Allen Bradley
R29	EB 3615	RESISTOR, 560 Ohm, ½W, 5%	1	Allen Bradley
R26, 42, 45	EB 1021	RESISTOR, 1 K Ohm, ½W, 10%	3	Allen Bradley
R23, 27	EB 1125	RESISTOR, 1.1 K Ohm, ½W, 5%	2	Allen Bradley
R22, 34, 37	EB 2025	RESISTOR, 2 K Ohm, ½W, 5%	3	Allen Bradley
R19, 25	EB 2425	RESISTOR, 2.4 K Ohm, ½W, 5%	2	Allen Bradley
R15	EB 3625	RESISTOR, 3.6 K Ohm, ½W, 5%	1	Allen Bradley
R35, 38, 46, 47, 48, 50	EB 4721	RESISTOR, 4.7 K Ohm, ½W, 10%	6	Allen Bradley
R53	EB 5125	RESISTOR, 5.1 K Ohm, ½W, 5%	1	Allen Bradley
R17	EB 7525	RESISTOR, 7.5 K Ohm, ½W, 5%	1	Allen Bradley
R33	EB 9125	RESISTOR, 9.1 K Ohm, ½W, 5%	1	Allen Bradley
R40, 41, 43, 44, 49, 51	EB 1031	RESISTOR, 10 K Ohm, ½W, 10%	6	Allen Bradley
R36, 39	EB 1531	RESISTOR, 15 K Ohm, ½W, 10%	2	Allen Bradley
R52, 54	EB 2731	RESISTOR, 27 K Ohm, ½W, 10%	2	Allen Bradley
R14	EB 1135	RESISTOR, 11 K Ohm, ½W, 5%	1	Allen Bradley
R20	EB 1305	RESISTOR, 13 Ohm, ½W, 10%	1	Allen Bradley
R30	EB 3005	RESISTOR, 30 Ohm, ½W, 5%	1	Allen Bradley
K3	C 1417–15	CHOPPER	1	Bristol
CR1	5003–003	DIODE	1	NLS
C1	XK2–682	CAPACITOR, Polystyrene, .0068 Mfd, 200 VDCW	1	Electron
C2	XL2–222	CAPACITOR, Polystyrene, .0022 Mfd, 200 VDCW	1	Electron
R12	025–OL–1–20	POTENTIOMETER, 20 Ohm	1	Conelco
R10	025–OL–1–200	POTENTIOMETER, 200 Ohm	1	Conelco
R8	025–OL–1–2K	POTENTIOMETER, 2 K Ohm	1	Conelco
R2–7	PW1719B–15003M	RESISTOR, 1.5 Meg, ½W, .05%, Aqua	6	NLS
R9	PW1719B–89902M	RESISTOR, 899 K Ohm, ½W, .05%, Orange	1	NLS
R11	PW1719B–89901M	RESISTOR, 89.9 K Ohm, ½W, .05%, Red	1	NLS
R13	PW1719B–99910M	RESISTOR, 9.9911 K Ohm, ½W, .05%, Brown	1	NLS
R1	GB 1051	RESISTOR, 1 Meg, 1W, 10%	1	Allen Bradley
K1, 2	5005–003	RELAY	2	NLS

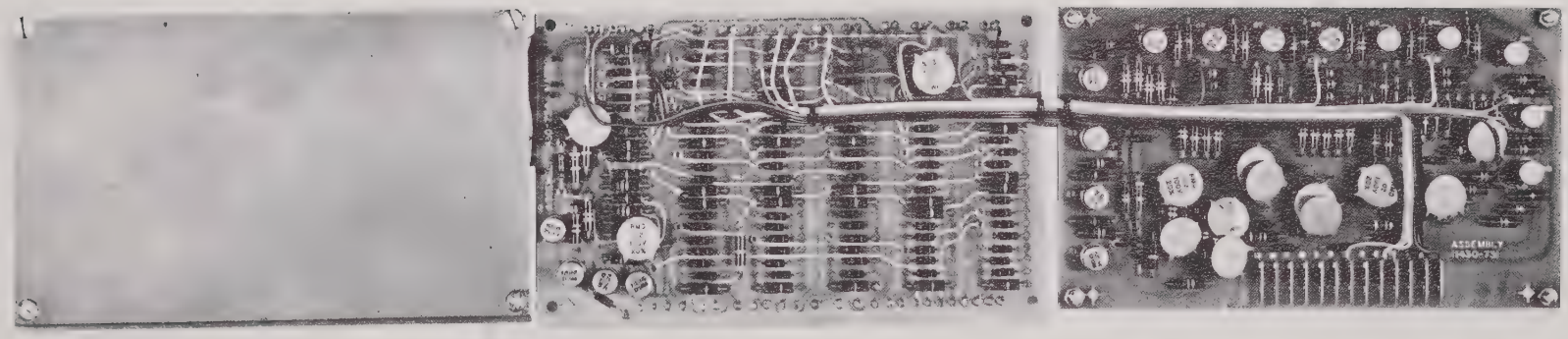

Figure 37. Programmer Assembly, Open View—Front (see Figures 39, 40, and 41 for parts identification).

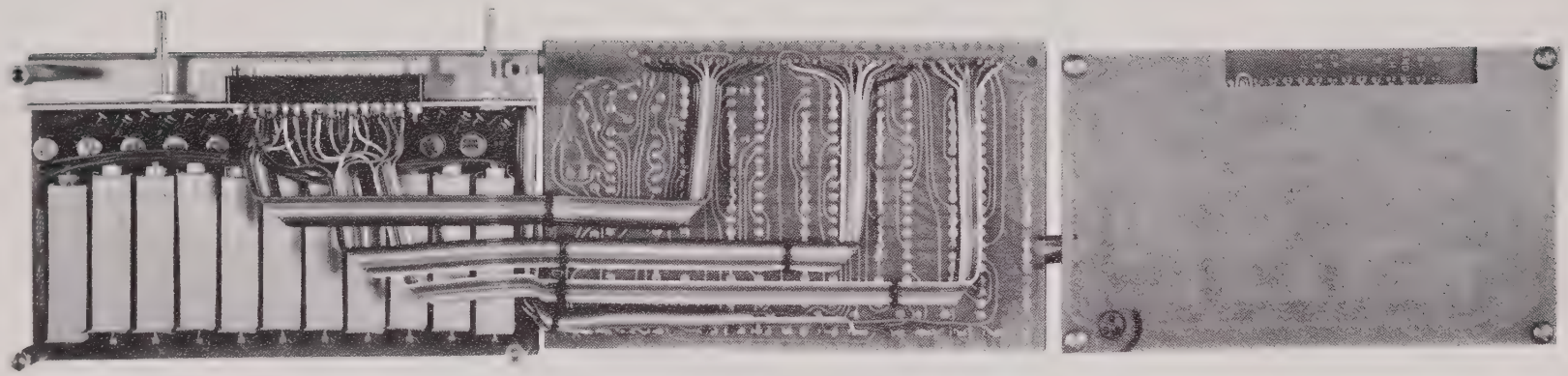

Figure 38. Programmer, Assembly, Open View—Rear.

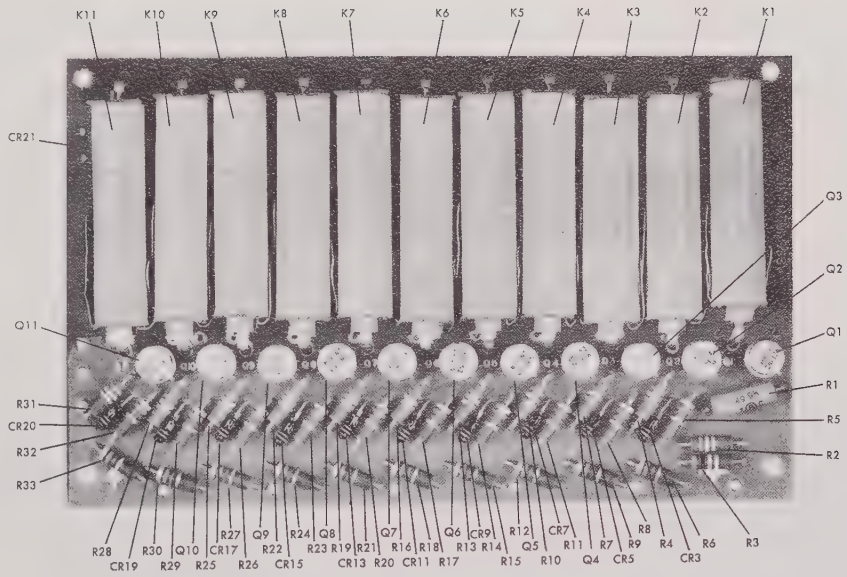

11430–733 BOARD ASSEMBLY RELAY

Figure 39. Programmer, Relay Board (harness removed).

CIRCUIT REFERENCE	PART NUMBER	DESCRIPTION	QTY PER UNIT	MANUFACTURER
R34	EB1021	RESISTOR, 1K, ½W, 10%	1	Allen Bradley
R1	DCM¼	RESISTOR, 49.9K, ¼W, 1%	1	Electra
R2, 4, 7, 10, 13, 16, 19, 22, 25, 28, 31	EB2731	RESISTOR, 27K, ½W, 10%	11	Allen Bradley
R3	EB1031	RESISTOR, 10K, ½W, 10%	1	Allen Bradley
R5, 6, 8, 9, 11, 12, 14, 15, 17, 18, 20, 21, 23, 24, 26, 27, 29, 30, 32, 33	EB4721	RESISTOR, 4.7K, ½W, 10%	20	Allen Bradley
CR1–21	5003–002	DIODE	21	NLS
Q1–11	2N1374	TRANSISTOR	11	T.I.
K1	CRZ1061	RELAY, Reed	1	C. P. Clare
K2–11	RP12450–G2	RELAY, Reed	10	C. P. Clare

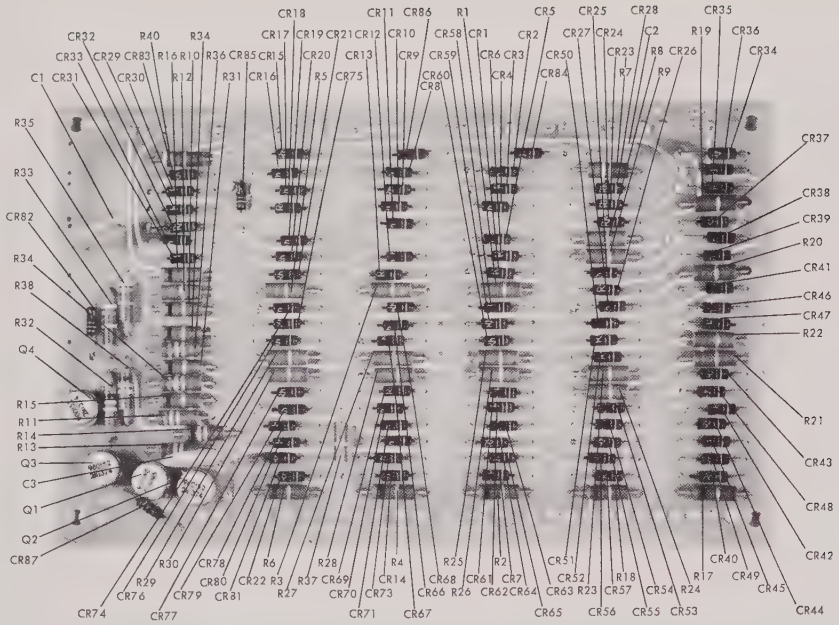

11430–734 MATRIX BOARD *Figure 40. Programmer, Matrix Board (harness removed).*

CIRCUIT REFERENCE	PART NUMBER	DESCRIPTION	QTY PER UNIT	MANUFACTURER
C1–C3	BT.02	CAPACITOR, .02 Mfd., ±20%	3	R.M.C.
R7	EB2241	RESISTOR, 220K, ½W, 10%	1	Allen Bradley
R11, 13, 34, 36	EB2731	RESISTOR, 27K, ½W, 10%	4	Allen Bradley
R14, 32, 38	EB1031	RESISTOR, 10K, ½W, 10%	3	Allen Bradley
R33, 35, 40	EB4721	RESISTOR, 4.7K, ½W, 10%	3	Allen Bradley
R1, 3, 5, 8, 9, 19–30, 37, 12	EB2221	RESISTOR, 2.2K, ½W, 10%	19	Allen Bradley
R2, 4, 6, 10, 15, 16, 17, 18, 31, 39	EB1021	RESISTOR, 1K, ½W, 10%	10	Allen Bradley
CR1–CR87	5003–002	DIODE	87	NLS
Q1–Q4	2N1374	TRANSISTOR	4	T.I.

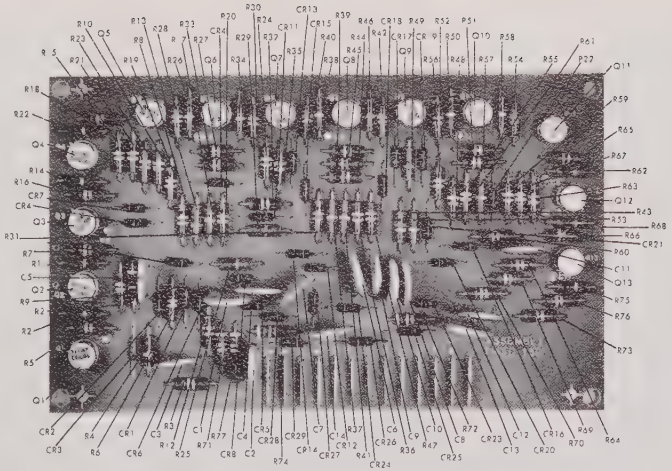

11430–731 COUNTER BOARD

Figure 41. Programmer, Counter Board (harness removed).

CIRCUIT REFERENCE	PART NUMBER	DESCRIPTION	QTY PER UNIT	MANUFACTURER
C1–C14	BT.02	CAPACITOR, .02 Mfd., ±20%	14	Radio Mat'ls. Co.
R10, 12, 23, 24, 35, 36, 47, 48, 59, 60	EB2241	RESISTOR, 220K, ½W, 10%	10	Allen Bradley
R71, 72, 77, 74	EB4731	RESISTOR, 47K, ½W, 10%	4	Allen Bradley
R3, 5, 7, 16, 18, 28, 30, 40, 42, 52, 54, 64, 65, 66, 69, 70, 76	EB2731	RESISTOR, 27K, ½W, 10%	17	Allen Bradley
R2, 6, 8, 15, 19, 20, 21, 27, 31, 32, 33, 39, 43, 44, 45, 51, 55, 56, 57, 63, 67, 73	EB1031	RESISTOR, 10K, ½W, 10%	22	Allen Bradley
R9	EB4721	RESISTOR, 4.7K, ½W, 10%	1	Allen Bradley
R4, 13, 17, 25, 29, 37, 41, 49, 53, 61	EB2221	RESISTOR, 2.2K, ½W, 10%	10	Allen Bradley
R1, 11, 14, 22, 26, 34, 38, 46, 50, 58, 62, 68, 75	EB1021	RESISTOR, 1K, ½W, 10%	13	Allen Bradley
CR3	¼M6.8Z	DIODE, Zener	1	Motorola
CR1, 2, 4–29	5003–002	DIODE	28	NLS
Q1–Q13	2N1374	TRANSISTOR	13	T.I.

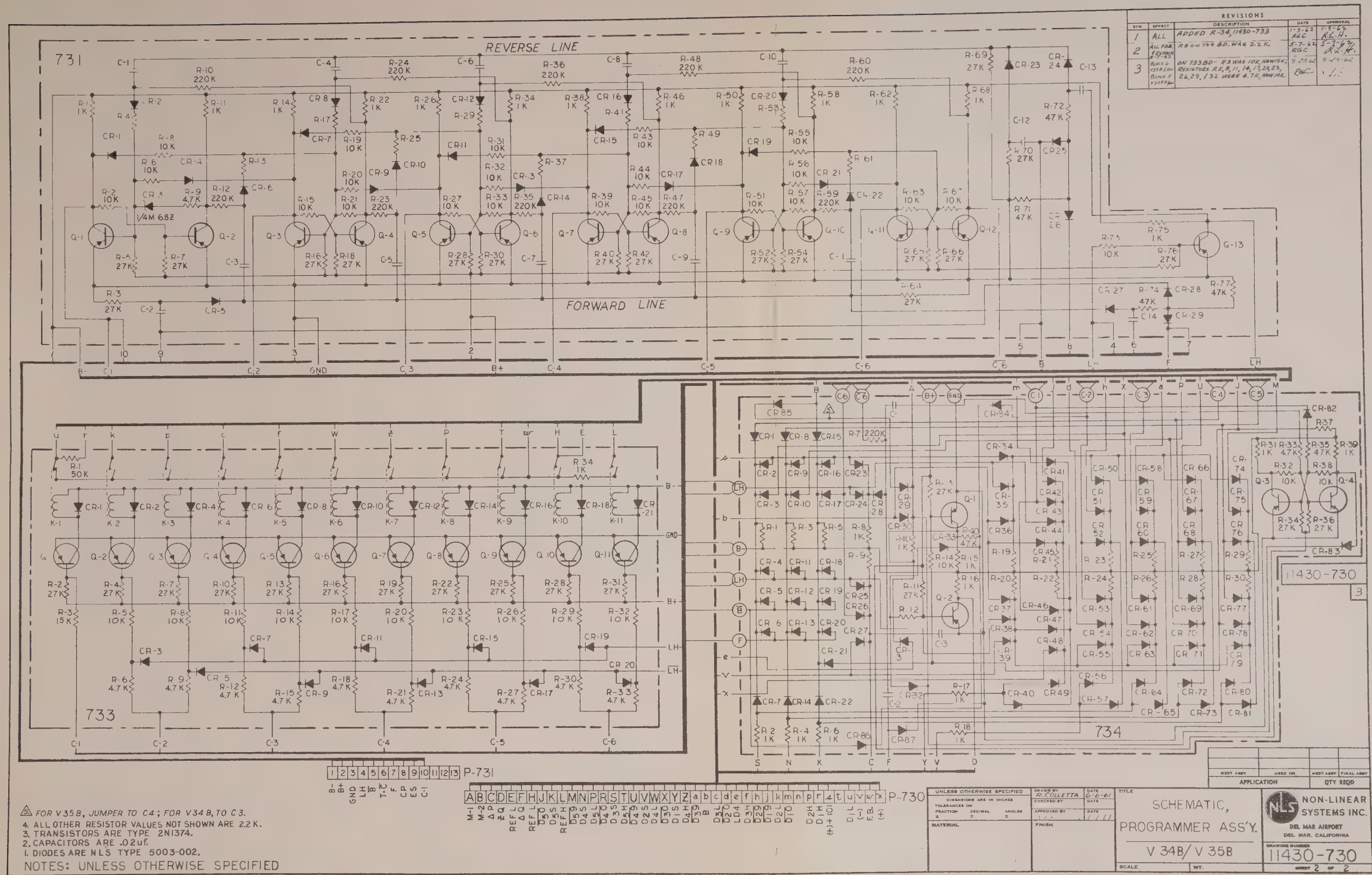
REVISIONS
BY | EFFECT | DESCRIPTION | DATE | APPROVAL
1 | ALL | ADDED R-34, 11430-733 | 1-3-62 RGC | 1-3-62 R.L.H.
2 | ALL FAB. & REPAIR 5-7-62 | R8 ON 733 BD. WAS 2.2K | 5-7-62 RGC | 5-7-62 R.L.H.
3 | BLOCK 6 V35B (ON BLOCK 5 V35B) | ON 733 BD - R3 WAS 10K, NOW 15K; RESISTORS R5, 8, 11, 14, 17, 20, 23, 26, 29, & 32 WERE 4.7K, NOW 10K. | 9-25-62 RGC | 9-25-62
731
REVERSE LINE
FORWARD LINE
733
734
11430-730
P-731
P-730
FOR V35B, JUMPER TO C4; FOR V34B, TO C3.
4. ALL OTHER RESISTOR VALUES NOT SHOWN ARE 2.2 K.
3. TRANSISTORS ARE TYPE 2N1374.
2. CAPACITORS ARE .02 uf.
1. DIODES ARE NLS TYPE 5003-002.
NOTES: UNLESS OTHERWISE SPECIFIED
UNLESS OTHERWISE SPECIFIED
DIMENSIONS ARE IN INCHES
TOLERANCES ON
FRACTION ± DECIMAL ± ANGLES ±
MATERIAL
FINISH
DRAWN BY R. COLLETTA 6-6-61
CHECKED BY
APPROVED BY
TITLE
SCHEMATIC, PROGRAMMER ASS'Y.
V 34B/ V 35B
SCALE
WT.
NEXT ASSY | USED ON | NEXT ASSY | FINAL ASSY
APPLICATION
QTY REQD
NON-LINEAR SYSTEMS INC.
DEL MAR AIRPORT
DEL MAR, CALIFORNIA
DRAWING NUMBER
11430-730
SHEET 2 OF 2

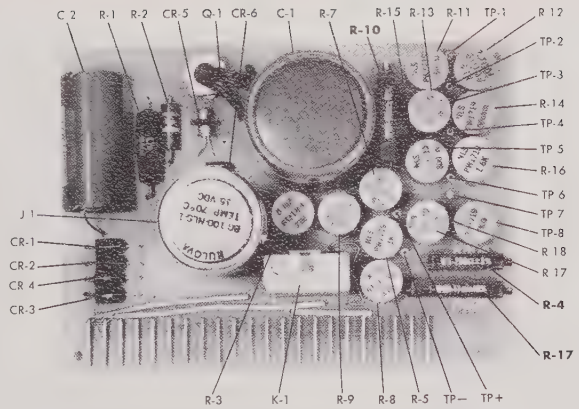

Figure 42. Zener Reference Voltage Supply Board.

CIRCUIT REFERENCE	PART NUMBER	DESCRIPTION	QTY PER UNIT	MANUFACTURER
K1	5005–003	RELAY	1	NLS
C2	05RM100	CAPACITOR, Elect., 100 Mfd., 50 VDCW	1	Ind. Cond.
C1	05RTP500	CAPACITOR, Elect., 500 Mfd., 50 VDCW	1	Ind. Cond.
R4	W5–P2–200	POTENTIOMETER, 200 Ohm, 10%	1	Atohm
R10	W101–P1–60	POTENTIOMETER, 60 Ohm, 10%	1	Atohm
R6	2420–17	POTENTIOMETER, 17 Ohm, 10%	1	Conelco
R8	PW1719	RESISTOR, 25K Ohm, ½ W, 1%	1	NLS
R18	PW1719	RESISTOR, 7K Ohm, ½ W, .05%	1	NLS
R17	PW1719	RESISTOR, 3.2K Ohm, ½ W, .05%	1	NLS
R7, R9	PW1719	RESISTOR, 3.2K Ohm, ½ W, .25%	2	NLS
R16	PW1719	RESISTOR, 1.6K Ohm, ½ W, .1%	1	NLS
R5	PW1719	RESISTOR, 1K Ohm, ½ W, .25%	1	NLS
R15	PW1719	RESISTOR, 800 Ohm, ½ W, .1%	1	NLS
R14	PW1719	RESISTOR, 400 Ohm, ½ W, .25%	1	NLS
R3	PW1719	RESISTOR, 300 Ohm, ½ W, .25%	1	NLS
R13	PW1719	RESISTOR, 200 Ohm, ½ W, .25%	1	NLS
R12	PW1719	RESISTOR, 100 Ohm, ½ W, .5%, ⅜" Leads	1	NLS
R11	PW1719	RESISTOR, 50 Ohm, ½ W, 1%	1	NLS
R2	GB56G1	RESISTOR, 5.6 Ohm, 1W, 10%	1	AB
R1	PRC 5A	RESISTOR, .6 Ohm, 5W, 1%	1	PRC
Q1	2N526	TRANSISTOR	1	G.E.
CR5	1N429	DIODE	1	Hoffman
CR1, 2, 3, 4, 6	1N2616	DIODE	5	Motorola
	11420–054	ZENER OVEN SUB-ASSY.	1	NLS

REVISIONS				
SYM	EFFECT	DESCRIPTION	DATE	APPROVAL
1		CIRCUIT CHG TO ALL "INTERPRETE" CHG OF RELAY	21 JUNE 60 APW	7-28-60
		REVISE CIRCUIT OF "Z-" & "Z+" TO PINS 2 & 3 OF K-801	8 OCT 60 ROC	10-17-60

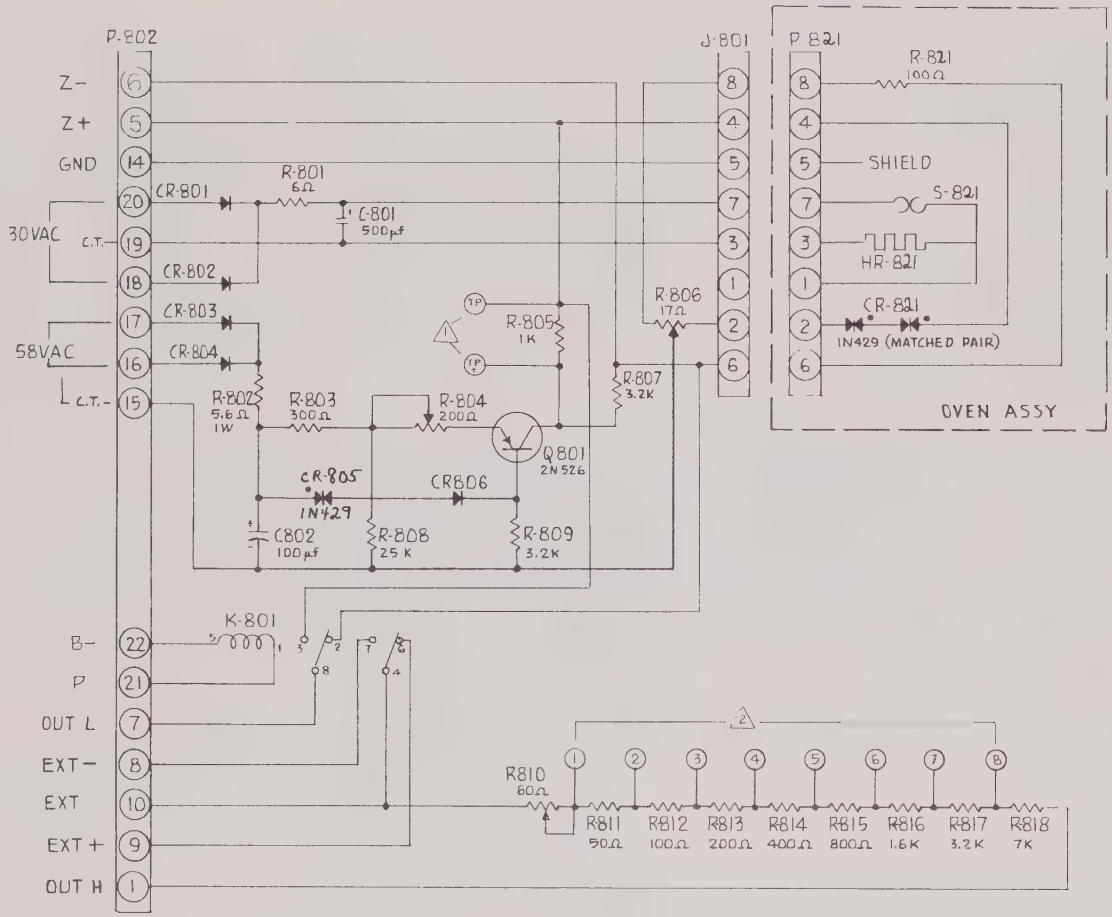

2 CERTAIN COMBINATIONS ARE SHORTED TO COMPENSATE FOR ZENER DIODE VOLTAGE (SEE MANUAL)

1 TP-1 & TP-2 ARE USED IN ADJUSTING THE ZENER REFERENCE

NOTES—UNLESS OTHERWISE SPECIFIED:

NEXT ASSY	USED ON	NEXT ASSY	FINAL ASSY
APPLICATION		QTY REQD	

UNLESS OTHERWISE SPECIFIED
DIMENSIONS ARE IN INCHES
TOLERANCES ON
FRACTION ± DECIMAL ± ANGLES ±

MATERIAL

DRAWN BY A. R. WALLIN DATE 1 JUNE '60
CHECKED BY DATE 6/1/60
APPROVED BY DATE

FINISH

TITLE
SCHEMATIC-
ZENER SUPPLY ASSEM.
V34A V35A
DIGITAL VOLTMETER

SCALE WT.

NON-LINEAR SYSTEMS INC.
DEL MAR AIRPORT
DEL MAR, CALIFORNIA

DRAWING NUMBER
11420-050

SHEET 2 OF

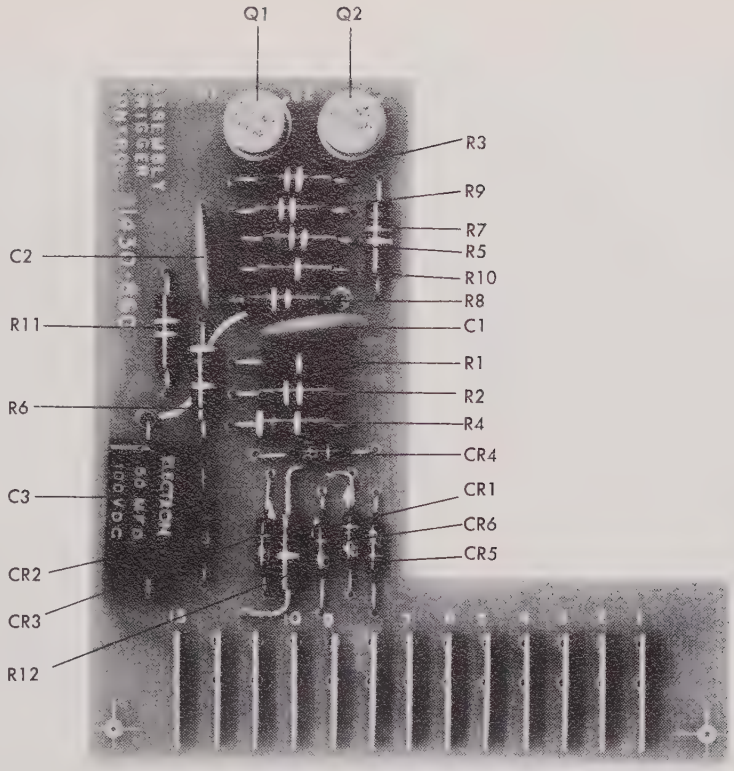

Figure 43. Trigger Control Board.

CIRCUIT REFERENCE	PART NUMBER	DESCRIPTION	QTY PER UNIT	MANUFACTURER
C3	ME1–504E	CAPACITOR, 5 Mfd., 100 VDC, Metalized Paper	1	Electron
C1, C2	BT.02	CAPACITOR, .02 Mfd., ±20%	2	R.M.C.
R2, R8, R11	EB2241	RESISTOR, 220K, ½W, 10%	3	Allen Bradley
R5, R7	EB2731	RESISTOR, 27K, ½W, 10%	2	Allen Bradley
R3, R9	EB1031	RESISTOR, 10K, ½W, 10%	2	Allen Bradley
R4, R6	EB4721	RESISTOR, 4.7K, ½W, 10%	2	Allen Bradley
R1, R10, R12	EB1021	RESISTOR, 1K, ½W, 10%	3	Allen Bradley
CR1-CR6	5003–002	DIODE	6	NLS
Q1, Q2	2N1374	TRANSISTOR	2	T.I.

11430-860 SHEET 2 | 1

REVISIONS				
SYM.	EFFECT.	DESCRIPTION	DATE	APPROVAL
1	ALL	ADDED R-12	1-10-62	R.L.H.

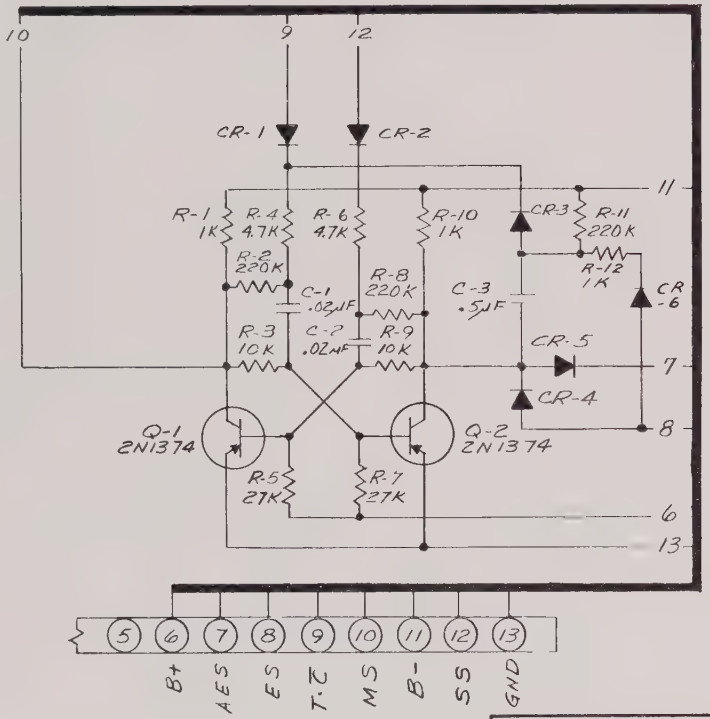

NEXT ASSY	USED ON	NEXT ASSY	FINAL ASSY
APPLICATION		QTY REQD	

1. DIODES ARE NLS TYPE 5003-002.
NOTES: UNLESS OTHERWISE SPECIFIED

UNLESS OTHERWISE SPECIFIED	DRAWN BY R. Coletta	DATE 8-7-61	TITLE SCHEMATIC - TRIGGER CONTROL BOARD	NON-LINEAR SYSTEMS INC.
DIMENSIONS ARE IN INCHES	CHECKED BY R. Collier	DATE 7-7-61		DEL MAR AIRPORT
TOLERANCES ON FRACTION ± DECIMAL ± ANGLES ±	APPROVED BY R. Hoover	DATE 7-7-61		DEL MAR, CALIFORNIA
MATERIAL	FINISH		MODELS V34B/V35B	DRAWING NUMBER 11430-860
			SCALE / WT.	SHEET 2 OF 2

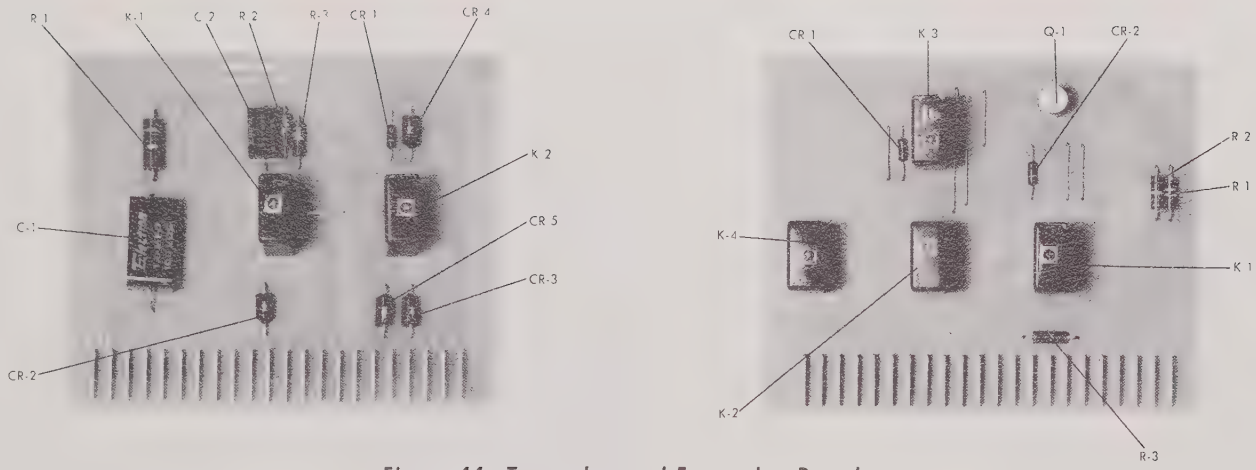

Figure 44. Two-relay and Four-relay Boards.

11420–830 ASSEMBLY, 2-RELAY

CIRCUIT REFERENCE	PART NUMBER	DESCRIPTION	QTY PER UNIT	MANUFACTURER
K1, K2	5005–002	RELAY	2	NLS
R2, R3	EB2731	RESISTOR, 27K, ½ W, 10%	1	Allen Bradley
R1	GB5125	RESISTOR, 5.1 K, 1W, 5%	1	Allen Bradley
C1	ME1–105	CAPACITOR, Metalized Paper, 1 Mfd., 100 VDC	1	Electron
C2	ME2–473E	CAPACITOR, Metalized Paper, .047 Mfd., 200 VDC	1	Electron
CR2-CR5	1N2616	DIODE	4	Motorola
CR1	5003–002	DIODE	1	NLS

11420–800 4-RELAY BOARD

CIRCUIT REFERENCE	PART NUMBER	DESCRIPTION	QTY PER UNIT	MANUFACTURER
K1–K4	5005–002	RELAY	4	NLS
R1	EB1031	RESISTOR, 10K, ½ W, 10%	1	Allen Bradley
R2	EB2221	RESISTOR, 2.2K, ½ W, 10%	1	Allen Bradley
R3	EB1021	RESISTOR, 1K, ½ W, 10%	1	Allen Bradley
CR1, CR2	5003–002	DIODE	2	NLS
Q1	2N1374	TRANSISTOR	1	T.I.

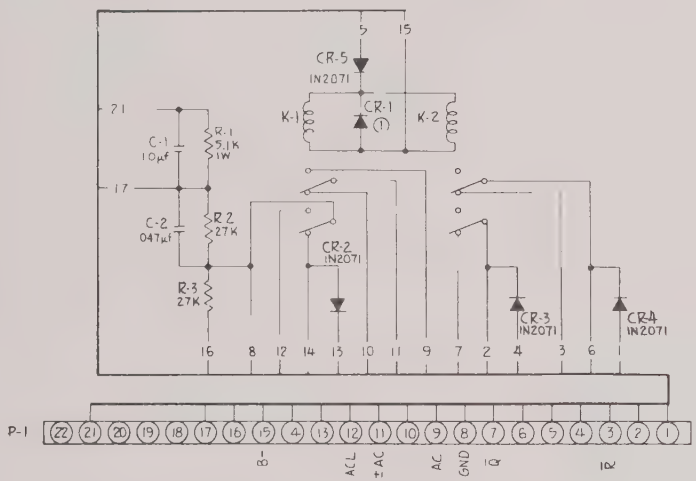

2. COMPONENT REF. NO'S ARE IN 830 SERIES i.e CR-4 = CR-834

① NLS NO. 5003-002 DIODE

NOTES - UNLESS OTHERWISE SPECIFIED:-

NEXT ASSY	USED ON	NEXT ASSY	F NAL ASSY
APPLICATION		QTY REQD	

UNLESS OTHERWISE SPECIFIED — DIMENSIONS ARE IN INCHES — TOLERANCES ON: FRACTION ± DECIMAL ± ANGLES ± — MATERIAL

DRAWN BY A. E. WALLIN — DATE 5 JUNE '60 — CHECKED BY — DATE — APPROVED BY — DATE — FINISH

TITLE: SCHEMATIC — 2 RELAY BOARD ASSEMBLY — V34A V35A DIGITAL VOLTMETER

NON-LINEAR SYSTEMS INC. — DEL MAR AIRPORT — DEL MAR CALIFORNIA

DRAWING NUMBER 11420-830

SCALE — WT — SHEET 2 OF

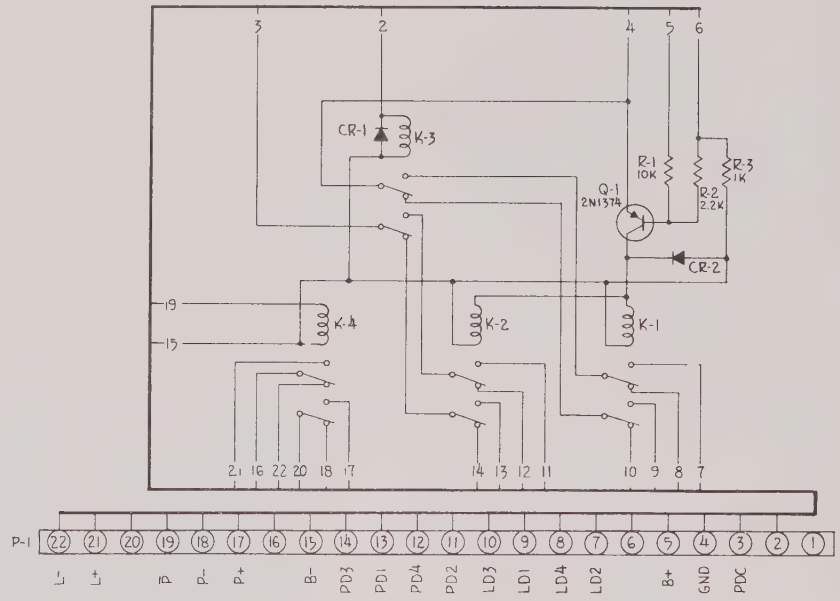

2. COMPONENT REF. NO'S ARE IN 800 SERIES-i.e. R-3 = R-803

1. DIODES ARE NLS NO 5003-002

NOTES - UNLESS OTHERWISE SPECIFIED:-

NEXT ASSY	USED ON	NEXT ASSY	F NAL ASSY
APPLICATION		QTY REQD	

UNLESS OTHERWISE SPECIFIED — DIMENSIONS ARE IN INCHES — TOLERANCES ON: FRACTION ± DECIMAL ± ANGLES ± — MATERIAL

DRAWN BY A. E. WALLIN — DATE 5 JUNE '60 — CHECKED BY — DATE — APPROVED BY — DATE — FINISH

TITLE: SCHEMATIC — 4 RELAY BOARD ASSEMBLY — V34A V35A DIGITAL VOLTMETER

NON-LINEAR SYSTEMS INC. — DEL MAR AIRPORT — DEL MAR CALIFORNIA

DRAWING NUMBER 11420-800

SCALE — WT — SHEET 2 OF

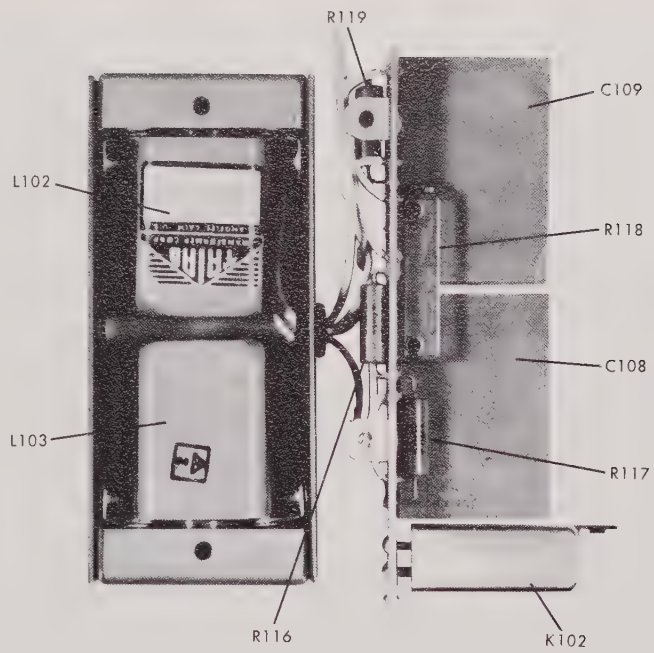

Figure 45. Input Filter.

11430–150 FILTER ASSEMBLY

CIRCUIT REFERENCE	PART NUMBER	DESCRIPTION	QTY PER UNIT	MANUFACTURER
K102	5005–003	RELAY	1	Babcock
L102–3	15594	CHOKE	2	Triad
C108–9	ZDP–1816	CAPACITOR, 1 Mfd., 1 KV	2	Elpac
R116	MDB	RESISTOR, 27.4K, ¼ W DC	1	IRC
R117	MDB	RESISTOR, 12.7K, ¼ W DC	1	IRC
R119	MDB	RESISTOR, 10K, ¼ W DC	1	IRC
R118	275–202	POTENTIOMETER, 2K	1	Bourns

SEE SCHEMATIC 11530-100

ON PAGE 55

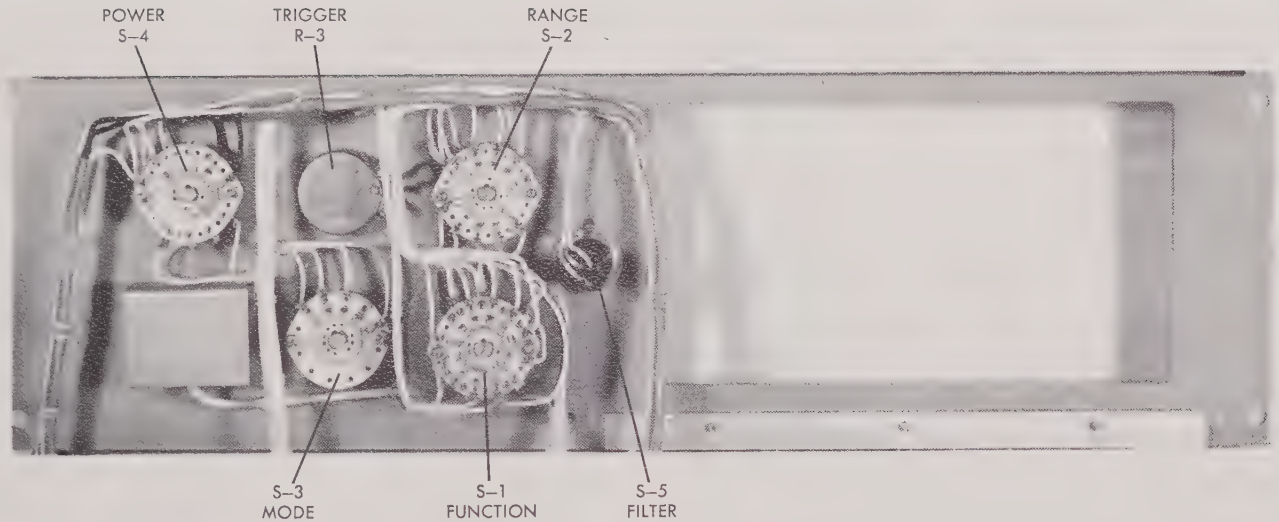

11530–100 FACADE, MAIN BOARD ASSEMBLY; SEE ALSO PAGE 58.

CIRCUIT REFERENCE	PART NUMBER	DESCRIPTION	QTY PER UNIT	MANUFACTURER
R3	11420–111	POTENTIOMETER, Trigger Level	1	NLS
S1	11420–122	SWITCH, Function	1	NLS
S2	11420–123	SWITCH, Range	1	NLS
S3	11420–121	SWITCH, Mode	1	NLS
S4	11420–120	SWITCH, Power	1	NLS
S5	WC 1868	SWITCH, Input Filter	1	NLS

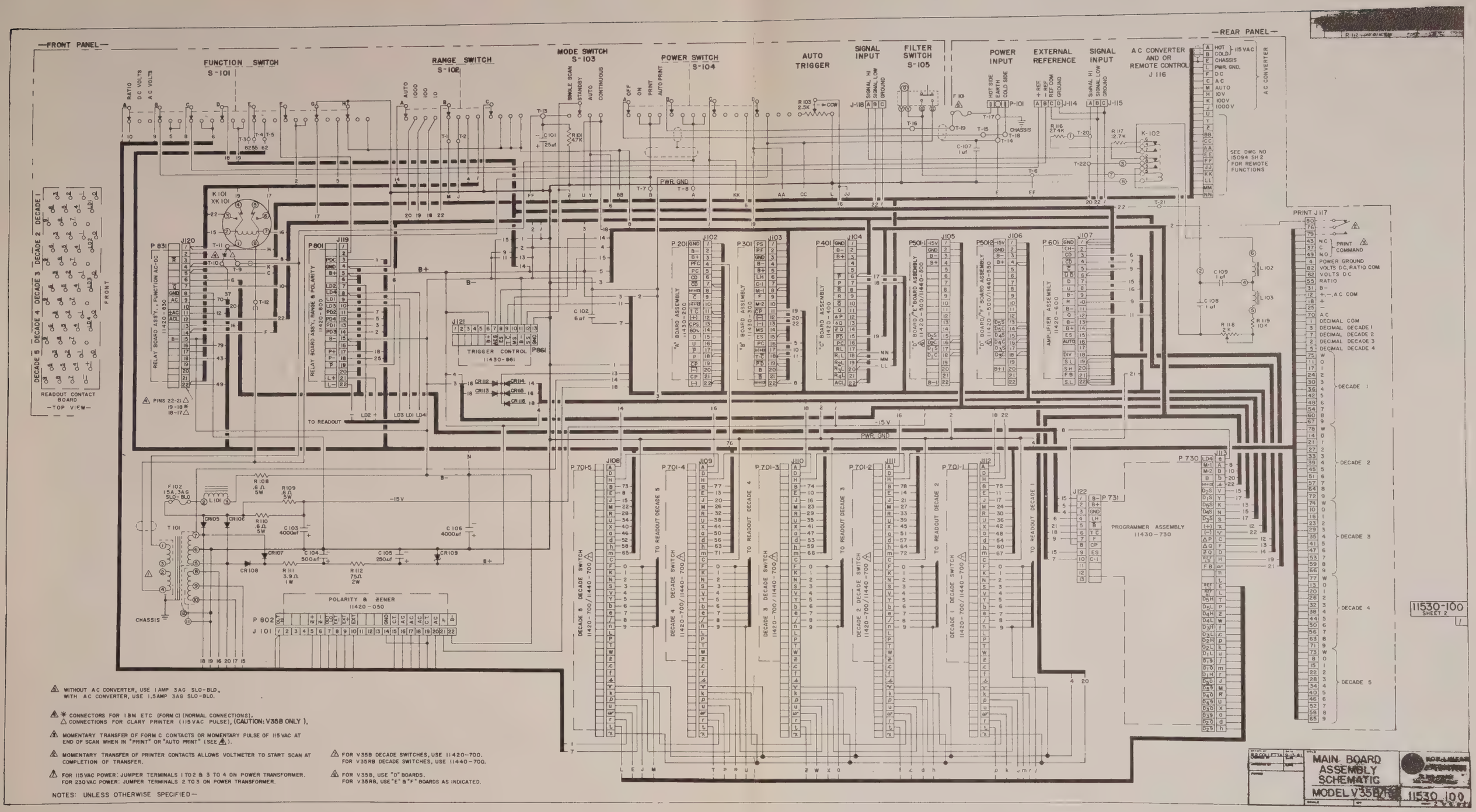

⚠ WITHOUT AC CONVERTER, USE 1 AMP 3AG SLO-BLO. WITH AC CONVERTER, USE 1.5 AMP 3AG SLO-BLO.

⚠ ✱ CONNECTORS FOR IBM ETC (FORM C) (NORMAL CONNECTIONS). △ CONNECTIONS FOR CLARY PRINTER (115 VAC PULSE), (CAUTION: V35B ONLY).

⚠ MOMENTARY TRANSFER OF FORM C CONTACTS OR MOMENTARY PULSE OF 115 VAC AT END OF SCAN WHEN IN "PRINT" OR "AUTO PRINT" (SEE ⚠).

⚠ MOMENTARY TRANSFER OF PRINTER CONTACTS ALLOWS VOLTMETER TO START SCAN AT COMPLETION OF TRANSFER.

⚠ FOR 115 VAC POWER: JUMPER TERMINALS 1 TO 2 & 3 TO 4 ON POWER TRANSFORMER. FOR 230 VAC POWER: JUMPER TERMINALS 2 TO 3 ON POWER TRANSFORMER.

⚠ FOR V35B DECADE SWITCHES, USE 11420-700. FOR V35RB DECADE SWITCHES, USE 11440-700.

⚠ FOR V35B, USE "D" BOARDS. FOR V35RB, USE "E" & "F" BOARDS AS INDICATED.

NOTES: UNLESS OTHERWISE SPECIFIED—

DRAWING NUMBER 15004-125 | 1

REVISIONS				
SYM.	EFFECT.	DESCRIPTION	DATE	APPROVAL
1	ALL	ADDED AN3057-6A, 323932, #465B, CHG'D #1410-C1 FROM 2 REQ'D TO 1 REQ'D, #1410-C2 FROM 1 REQ'D TO 2 REQ'D	2-2-62	I. THOMSON 2-2-62

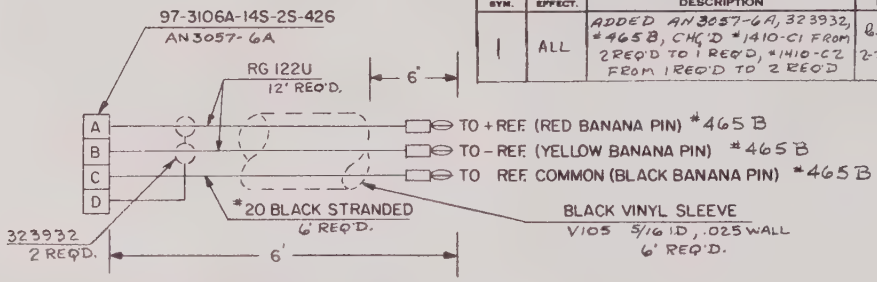

QTY.	INCLUDED WITH THIS CABLE
1	#1410-C1 SAFE-T-KLIP - BLACK
2	#1410-C2 SAFE-T-KLIP - RED
3	#332-A SPADE LUGS, BIRNBACH

NEXT ASSY	USED ON	NEXT ASSY	FINAL ASSY
11367	11367		
11520	11520	1	1
11420	11420	1	1
	APPLICATION	QTY REQD	

H4-03626

UNLESS OTHERWISE SPECIFIED
DIMENSIONS ARE IN INCHES
TOLERANCES ON
FRACTION ± DECIMAL ± ANGLES ±

MATERIAL

DRAWN BY R. COLLIER (MS) DATE 8-1-60
CHECKED BY R.L.H. DATE 8-1-60
APPROVED BY R. Hoelscher DATE 8-1-60

FINISH

TITLE
CABLE, EXTERNAL REFERENCE

SCALE WT.

NON-LINEAR SYSTEMS INC.
DEL MAR AIRPORT
DEL MAR, CALIFORNIA

DRAWING NUMBER 15004-125

SHEET OF

DRAWING NUMBER 15004-126 | 1

REVISIONS				
SYM.	EFFECT.	DESCRIPTION	DATE	APPROVAL
1	ALL	ADDED AN3057-6A, #465B #323932.	2-5-62	I. THOMSON

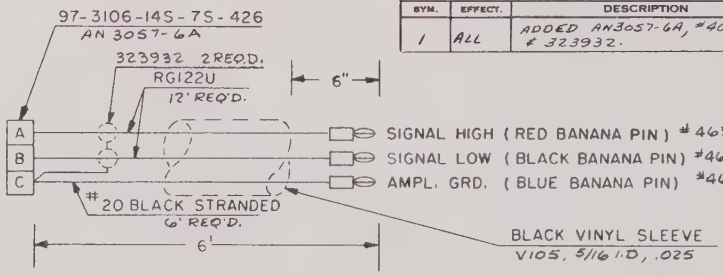

QTY	INCLUDED WITH THIS CABLE
1	# 1410-C1 SAFE-T-KLIP BLACK
1	# 1410-C2 SAFE-T-KLIP RED
3	# 332-A SPADE LUGS, BIRNBACH
1	# 31 ALLIGATOR CLIP, BIRNBACH

NEXT ASSY	USED ON	NEXT ASSY	FINAL ASSY
11367	11367	1	1
11520	11520	1	1
11420	11420	1	1
	APPLICATION	QTY REQD	

H4-03626

UNLESS OTHERWISE SPECIFIED
DIMENSIONS ARE IN INCHES
TOLERANCES ON
FRACTION ± 1/2" DECIMAL ± — ANGLES ± —

MATERIAL
NOTED

DRAWN BY R. COLLIER (M.S.) DATE 8-1-60
CHECKED BY R.L.H. DATE 8-1-60
APPROVED BY R. Hoelscher DATE 8-1-60

FINISH

TITLE
CABLE, INPUT

SCALE NONE WT.

NON-LINEAR SYSTEMS INC.
DEL MAR AIRPORT
DEL MAR, CALIFORNIA

DRAWING NUMBER 15004-126

SHEET 1 OF 1

REVISIONS				
SYM.	EFFECT.	DESCRIPTION	DATE	APPROVAL

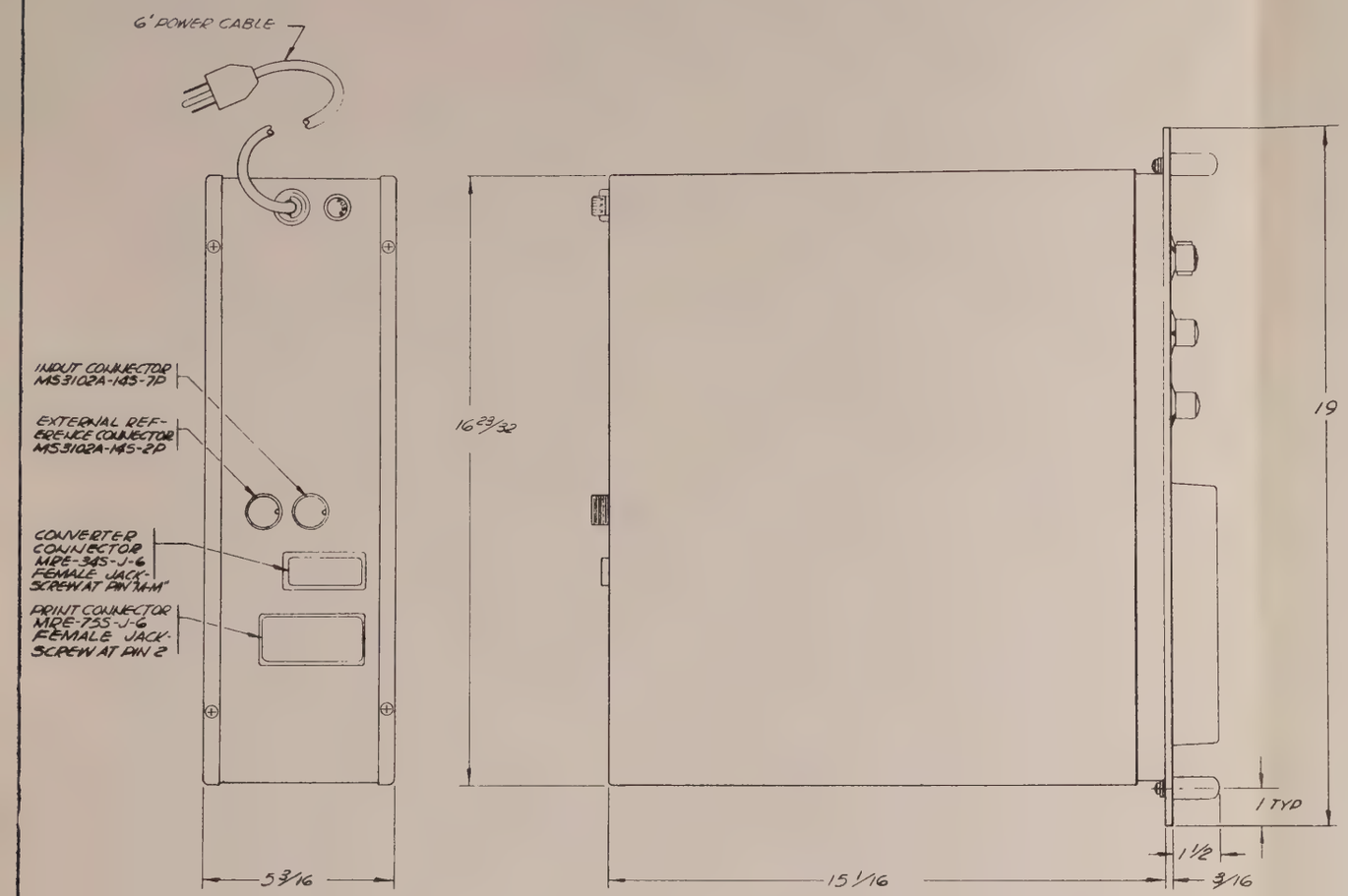

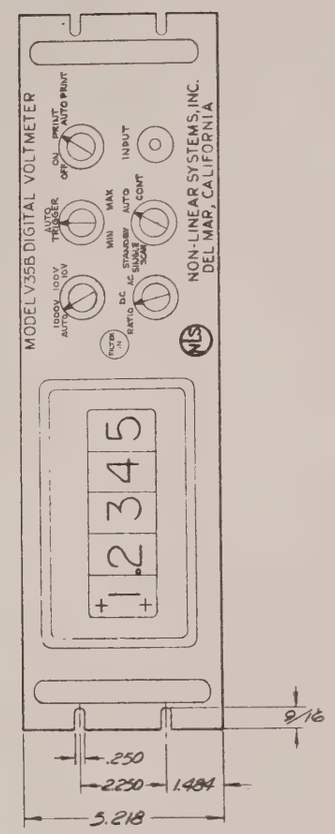

INSTRUMENT CHARACTERISTICS

GENERAL

STRUCTURE FABRICATED FROM ALUMINUM ALLOY.
PRINTED CIRCUIT BOARDS MADE FROM COPPER CLAD EPOXY.
READOUT WINDOWS MADE FROM PLEXIGLASS.
VISOR MADE FROM HIGH IMPACT STYRENE PLASTIC.
FRONT PANEL PAINTED LIGHT GRAY PER MIL-E-15090B, TYPE 3. CLASS 1.
CABINET, GOLD ANODIZE.

ELECTRICAL

DIGITS DISPLAYED-5.
VOLTAGE RANGE, DC VOLTS: ± 9.9999/ 99.999/ 999.99
RANGE CHANGING: AUTOMATIC
POLARITY CHANGING: AUTOMATIC
INPUT IMPEDANCE: 10 MEGOHMS, AT BALANCE.
INTERNAL REFERENCE VOLTAGE: TEMPERATURE COMPENSATED, ZENER DIODE TYPE DC POWER SUPPLY.
ACCURACY: ±.01% OF READING OR ±1 DIGIT.

RESOLUTION: 1 DIGIT
EXTERNAL REFERENCE VOLTAGE ±10 TO ±100 VDC.
EXTERNAL REFERENCE INPUT IMPEDANCE 50,000 OHMS.
PRIMARY POWER: 115/230 VOLTS ±10%, 50-60 CPS APPROXIMATELY 50 VOLT-AMPS.

FEATURES

INDIVIDUAL PLUG-IN OIL BATH STEPPING SWITCHES.
COMPLETELY TRANSISTORIZED.
BALANCING TIME MAXIMUM: 2.36 SECONDS

SNAP IN READOUT

CONNECTIONS

SIGNAL INPUT CONNECTOR:
- A - INPUT
- B - INPUT COMMON
- C - CHASSIS GROUND

EXTERNAL REFERENCE CONNECTOR:
- A - + REFERENCE
- B - - REFERENCE
- C - REFERENCE COMMON
- D - CHASSIS GROUND

11530 SH. 3

NEXT ASSY	USED ON	NEXT ASSY	FINAL ASSY
APPLICATION		QTY REQD	

UNLESS OTHERWISE SPECIFIED
DIMENSIONS ARE IN INCHES
TOLERANCES ON
FRACTIONS ± 1/32 DECIMALS ± .010 ANGLES ±
MATERIAL

DRAWN BY G. WALKER DATE 9-8-61
CHECKED BY DATE
APPR. BY R. Hoeschler DATE 9-12-61
FINISH

TITLE
DIGITAL VOLTMETER
MODEL V35 B
OUTLINE DRAWING

SCALE 1/2 WT.

NON-LINEAR SYSTEMS INC.
DEL MAR AIRPORT
DEL MAR, CALIFORNIA

DRAWING NUMBER 11530
SHEET 3 OF 3

11530–100 MAIN BOARD; SEE ALSO PAGE 54.

CIRCUIT REFERENCE	PART NUMBER	DESCRIPTION	QTY PER UNIT	MANUFACTURER
L101	11400–108	CHOKE	1	NLS
T101	11420–109	TRANSFORMER, Power	1	NLS
CR109	3/4M8.2Z5	DIODE, Zener ¾ W	1	Motorola
CR107, CR108	1N2616	RECTIFIER	2	Motorola
CR105, CR106	1N1124R	RECTIFIER	2	T.I.
CR112, CR116	5003–002	DIODE	5	NLS
R101	EB4721	RESISTOR, 4.7K, ½ W, 10%	1	Allen Bradley
R108, R109, R110		RESISTOR, .6 Ohm, 5W, 1%	3	P.R.C.
R111	GB39G1	RESISTOR, 3.9 Ohm, 1W, 10%	1	Allen Bradley
R112	GB9101	RESISTOR, 75 Ohm, 2W, 10%	1	Allen Bradley
C107	ME2–105	CAPACITOR, 1 Mfd., 200 VDCW	1	Electron
C102	5002–002	CAPACITOR	1	NLS
C101	52RM25	CAPACITOR, 25 Mfd., 25 VDCW	1	Ind. Cond.
C103, C106	1B1246A	CAPACITOR, 4000 Mfd., 25 VDCW	2	Ind. Cond.
C104, C105	1B1249	CAPACITOR, 3X250 Mfd., 50 VDCW	1	Ind. Cond.
K101	KRP–11D	RELAY	1	P.B.

REVISIONS				
SYM	EFFECT	DESCRIPTION	DATE	APPROVAL
1	7-26-63 EON	REMOVED "LOCAL" CONTACT AT FROM PIN BB, J-1	7-26-63 RGC	7-[illegible]

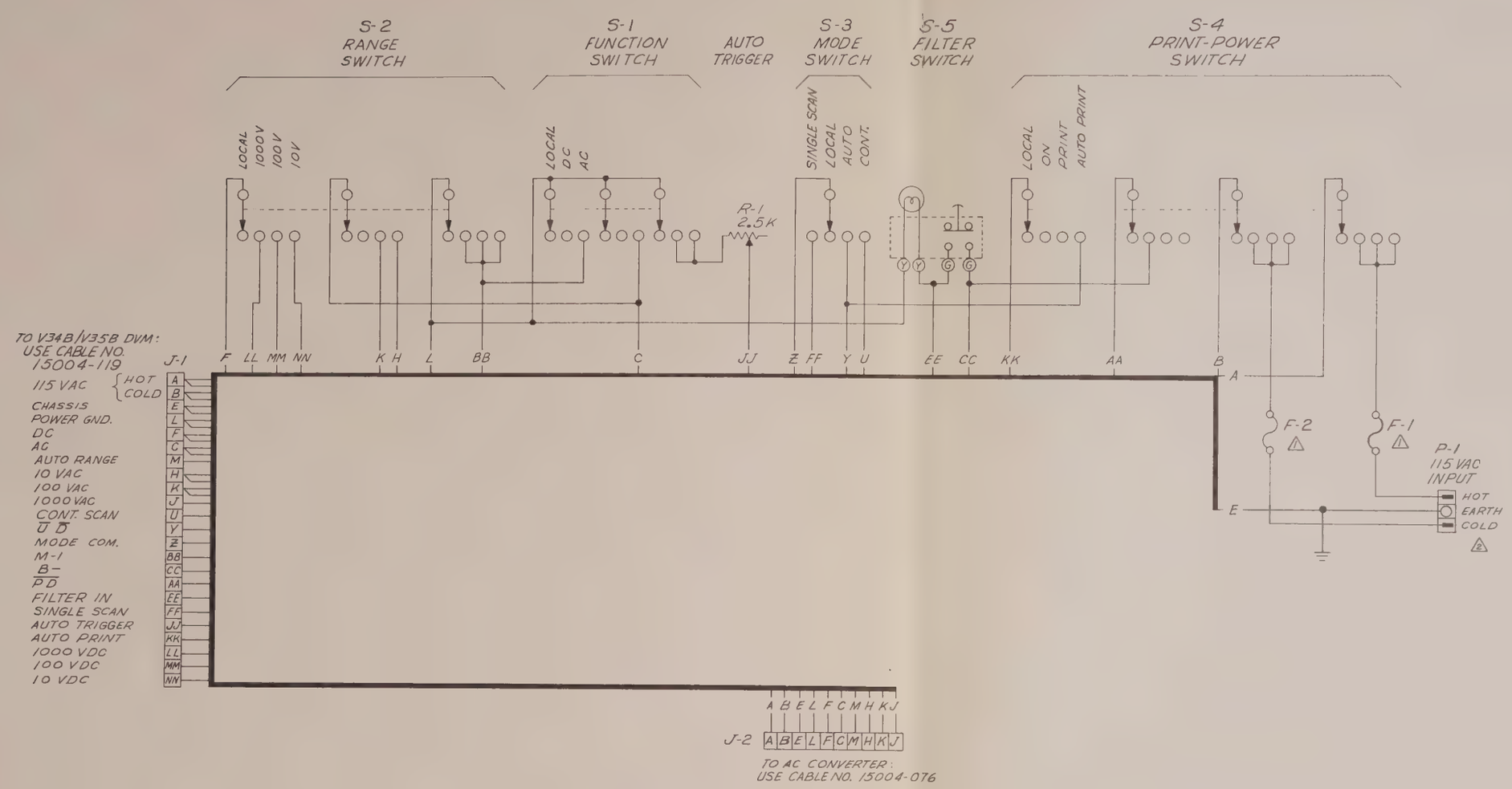

15094 SH. 2

6. THIS UNIT IS AN ACCESSORY, NOT A PART OF THE V34B/V35B; THIS DWG. IS INCLUDED WITH THE V34B/V35B DWGS. FOR REF. ONLY.
5. REMOTE CONTROL OF THE RATIO FUNCTION IS NOT AVAILABLE.
4. FOR REMOTE CONTROL THE DVM, SWITCHES MUST BE SET AS FOLLOWS: FUNCTION TO "DC," MODE TO "STANDBY," AUTO TRIGGER TO "MAX," RANGE TO "AUTO," POWER TO "OFF," & FILTER "OUT."
3. FOR LOCAL CONTROL AT THE DVM, S-1 THRU S-4 MUST BE SET TO LOCAL & FILTER "OUT."
2. PLUG POLARIZATION **MUST** BE OBSERVED.
1. FOR REMOTE CONTROL OF V34B/V35B, USE 3AG 1A SLO-BLO FUSE; FOR REMOTE CONTROL OF V34B/V35B **AND** THE 125C OR 125E CONVERTER, USE 3AG 1½A SLO-BLO FUSE.

NOTES-UNLESS OTHERWISE SPECIFIED:

NEXT ASSY	USED ON	NEXT ASSY	FINAL ASSY
	11530		
	11430		
APPLICATION		QTY REQD	

UNLESS OTHERWISE SPECIFIED DIMENSIONS ARE IN INCHES TOLERANCES ON FRACTION ± DECIMAL ± ANGLES ±	DRAWN BY R. COLETTA DATE 9-27-61	TITLE SCHEMATIC, REMOTE CONTROL
	CHECKED BY DATE	
	APPROVED BY DATE 10/19/61	
MATERIAL	FINISH	V34B/V35B
		SCALE WT.

NON-LINEAR SYSTEMS INC.
DEL MAR AIRPORT
DEL MAR, CALIFORNIA

DRAWING NUMBER 15094

SHEET 2 OF

REVISIONS				
SYM	EFFECT.	DESCRIPTION	DATE	APPROVAL

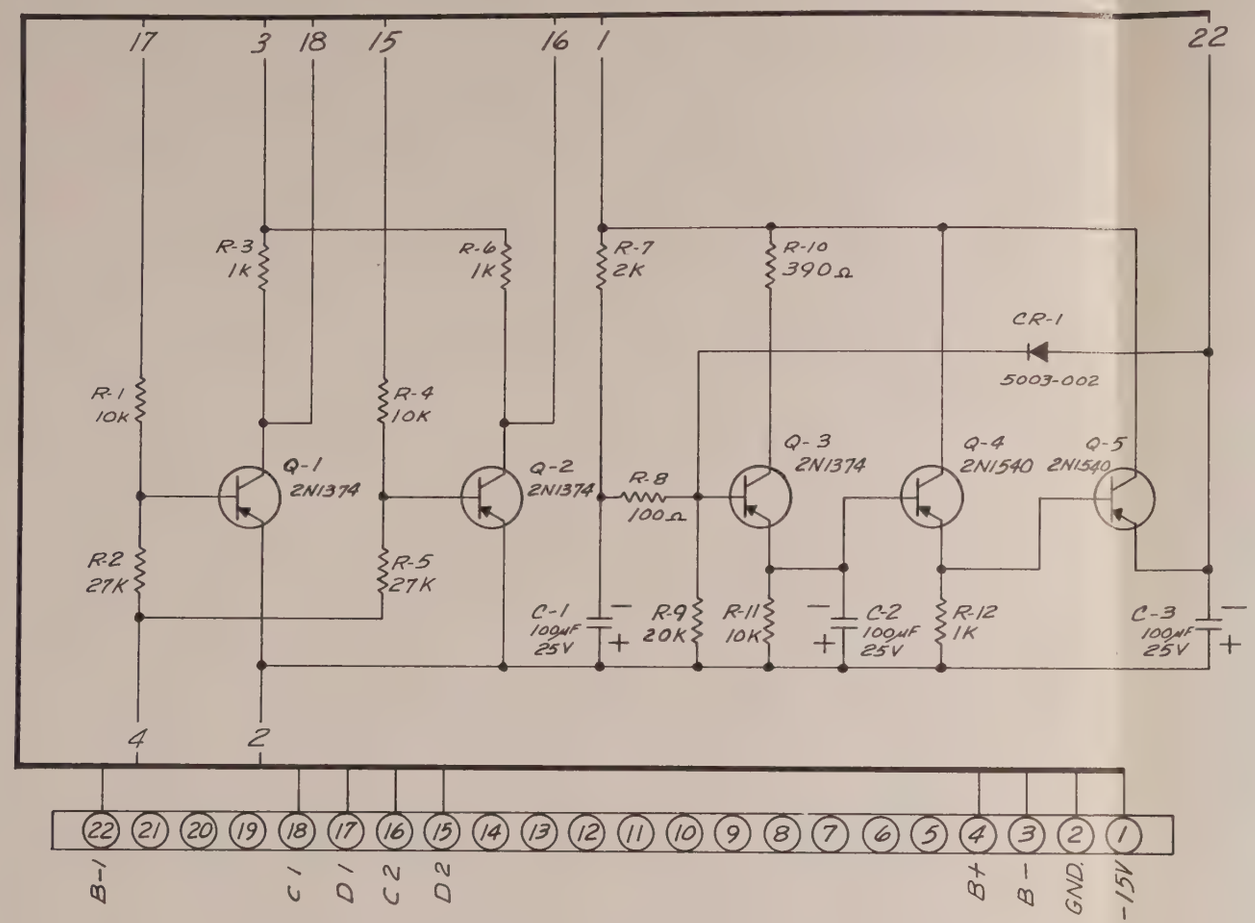

11440-500
SHEET 2

NEXT ASSY	USED ON	NEXT ASSY	FINAL ASSY
APPLICATION		QTY REQD	

UNLESS OTHERWISE SPECIFIED
DIMENSIONS ARE IN INCHES
TOLERANCES ON
FRACTION ± DECIMAL ± ANGLES ±

MATERIAL

DRAWN BY R. COLLETTA DATE 2-9-62
CHECKED BY DATE
APPROVED BY N. Horischer DATE 3-6-62
FINISH

TITLE
SCHEMATIC
"E" BOARD

V34RB / V35RB

SCALE WT.

NON-LINEAR SYSTEMS INC.
DEL MAR AIRPORT
DEL MAR, CALIFORNIA

DRAWING NUMBER 11440-500

SHEET 2 OF

REVISIONS				
SYM	EFFECT.	DESCRIPTION	DATE	APPROVAL

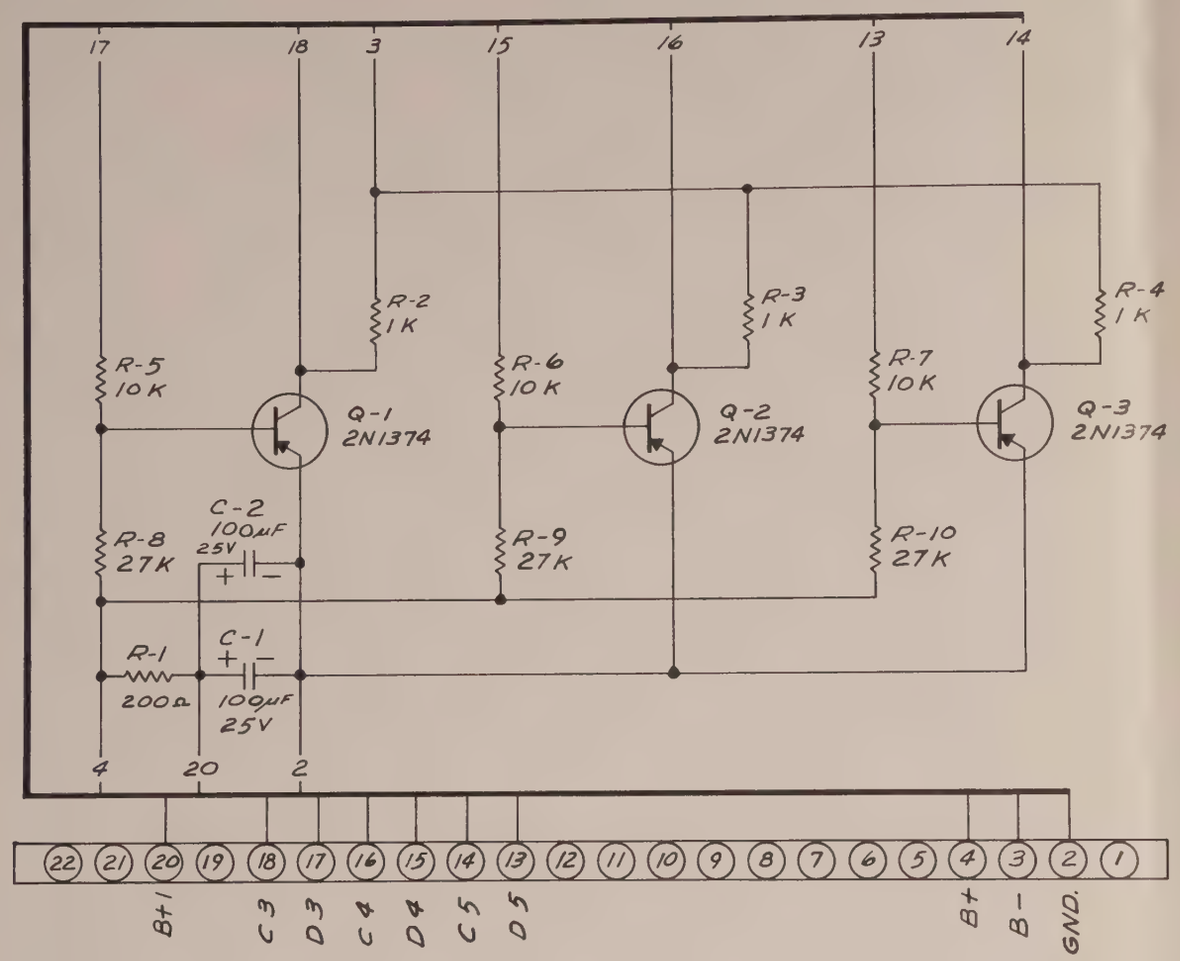

11440-550
SHEET 2

NEXT ASSY	USED ON	NEXT ASSY	FINAL ASSY
APPLICATION		QTY REQD	

UNLESS OTHERWISE SPECIFIED
DIMENSIONS ARE IN INCHES
TOLERANCES ON
FRACTION ± DECIMAL ± ANGLES ±
MATERIAL

DRAWN BY R. COLLETTA DATE 2-9-62
CHECKED BY DATE
APPROVED BY DATE
FINISH

TITLE
SCHEMATIC
"F" BOARD

V34RB/V35RB

SCALE WT.

NON-LINEAR SYSTEMS INC.
DEL MAR AIRPORT
DEL MAR, CALIFORNIA

DRAWING NUMBER 11440-550

SHEET 2 OF

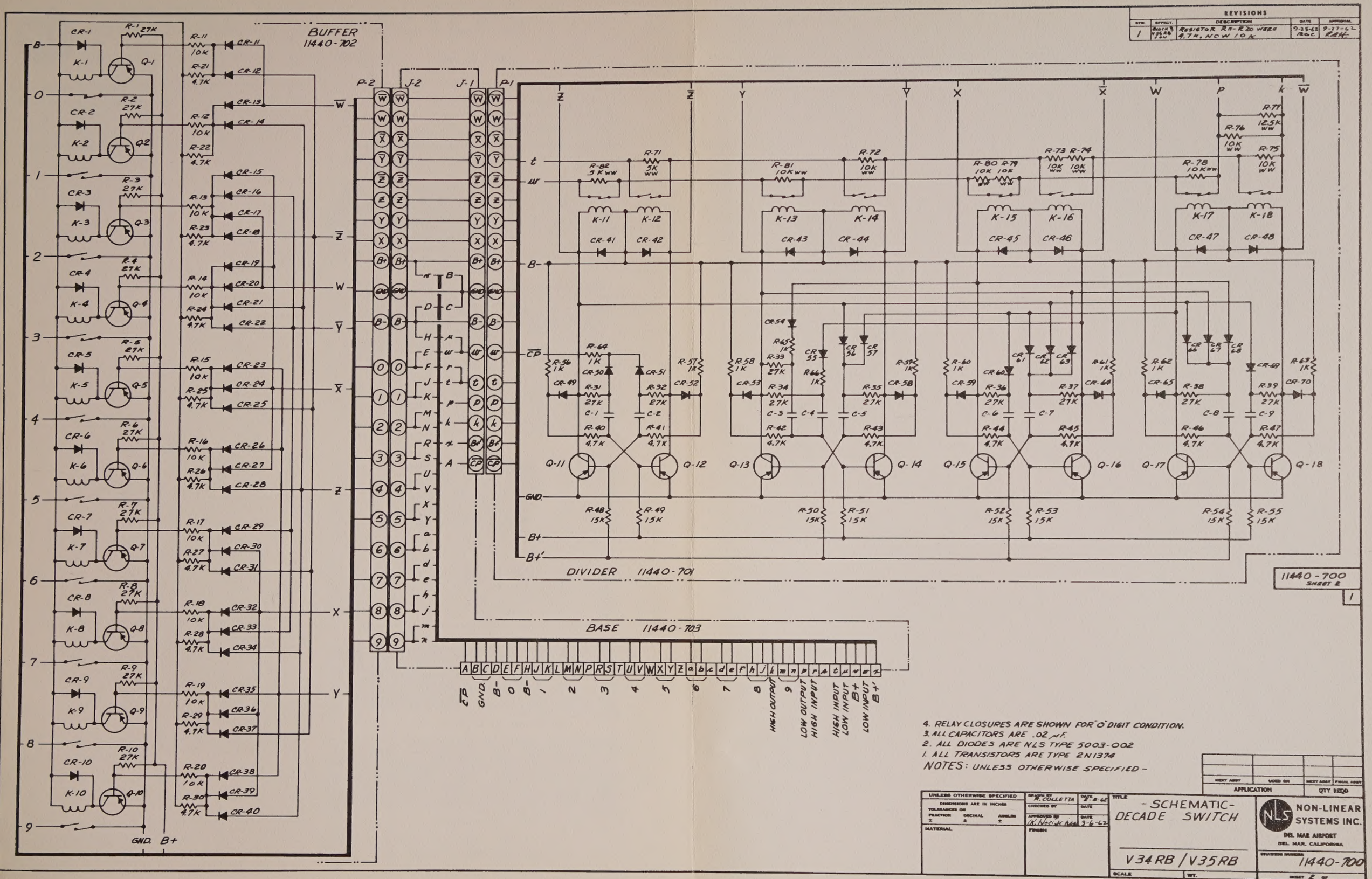

REVISIONS
SYM. | EFFECT. | DESCRIPTION | DATE | APPROVAL
1 | BLOCK 3 V34RB 1 ON | RESISTOR R11-R20 WERE 4.7K, NOW 10K | 9-25-62 RGC | 9-27-62 RRH
BUFFER 11440-702
DIVIDER 11440-701
BASE 11440-703
11440-700 SHEET 2
GND. B+
HIGH OUTPUT
LOW OUTPUT
HIGH INPUT
HIGH INPUT
LOW INPUT
B+
LOW INPUT
B+'
4. RELAY CLOSURES ARE SHOWN FOR "0" DIGIT CONDITION.
3. ALL CAPACITORS ARE .02 μF.
2. ALL DIODES ARE NLS TYPE 5003-002
1. ALL TRANSISTORS ARE TYPE 2N1374
NOTES: UNLESS OTHERWISE SPECIFIED -
UNLESS OTHERWISE SPECIFIED
DIMENSIONS ARE IN INCHES
TOLERANCES ON
FRACTION ± DECIMAL ± ANGLES ±
MATERIAL
DRAWN BY R. COLLETTA DATE 2-8-62
CHECKED BY DATE
APPROVED BY DATE 3-6-62
FINISH
TITLE
- SCHEMATIC -
DECADE SWITCH
V34RB / V35RB
SCALE
WT.
NEXT ASSY
USED ON
NEXT ASSY
FINAL ASSY
APPLICATION
QTY REQD
NON-LINEAR SYSTEMS INC.
DEL MAR AIRPORT
DEL MAR, CALIFORNIA
DRAWING NUMBER
11440-700
SHEET 2 OF

non linear
systems, inc.

DEL MAR, CALIFORNIA

www.manualsplus.com
1022564